Figure 1

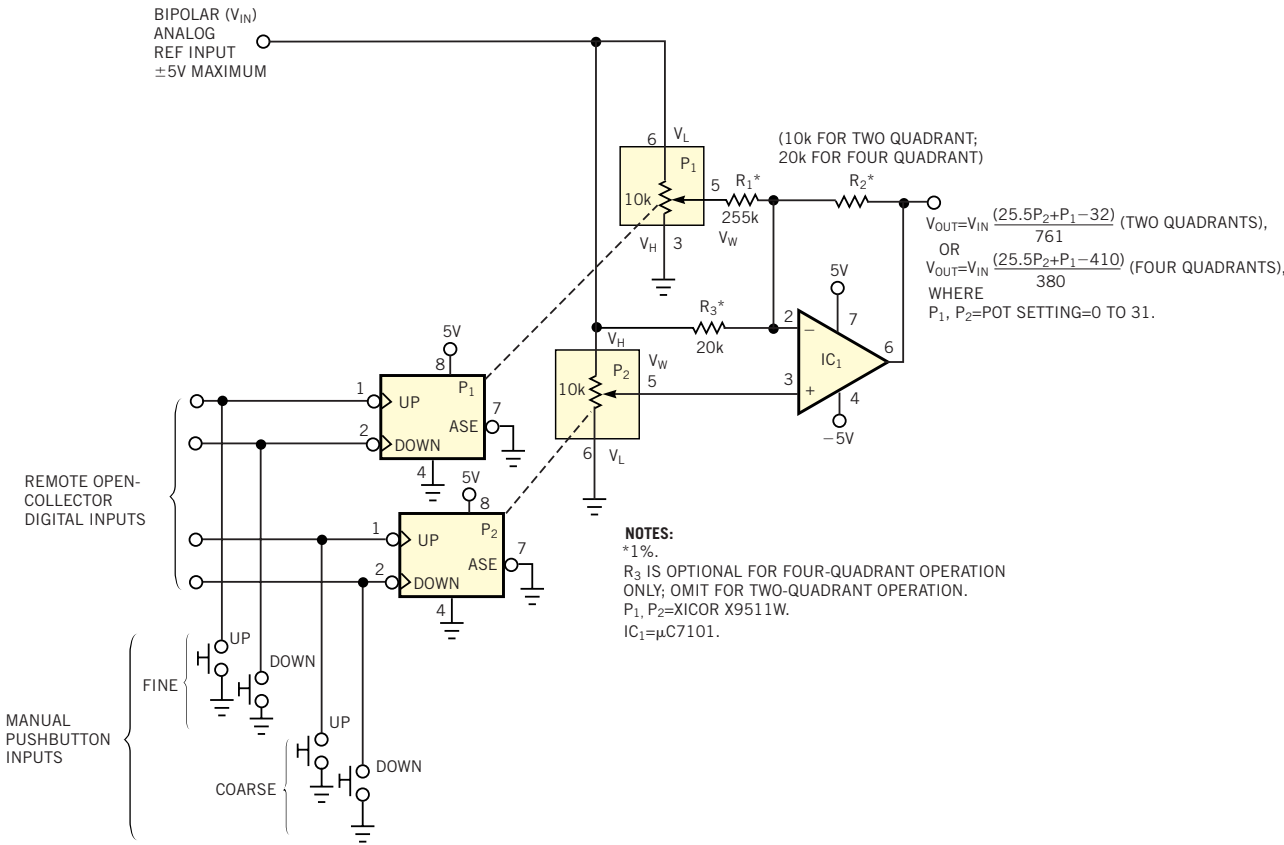

Use a pushbutton or provide a digital signal to choose a nonvolatile analog output with nearly 10-bit resolution.