For the Hi-res scan manual contact me
PE3HMP

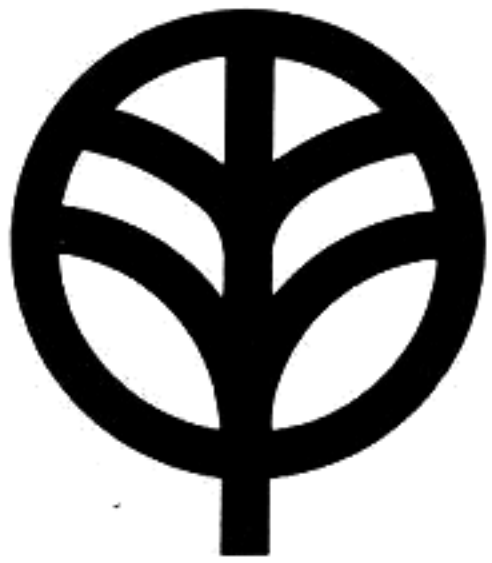

KENWOOD

SERVICE MANUAL

Model TS-770

http://www.qsl.net/pe3hmp

V-UHF ALL MODE DUO BANDER

CONTENTS / FEATURES

FEATURES 2
CIRCUIT DESCRIPTION 3
SEMICONDUCTOR/FILTER DATA 15
OPTION(BU-1) 16
OUTSIDE VIEWS 17
PACKING 19
PARTS LIST 20
BLOCK DIAGRAM 34
PC BOARD VIEWS 35
DISASSEMBLY 49
TROUBLE SHOOTING 54
ADJUSTMENTS 56
LEVEL DIAGRAM 76
CIRCUIT DIAGRAM 80
REFERENCE DATA 84
MEMO 86
SPECIFICATIONS 89

FEATURES

1. 144/430 MHz, all mode (FM, SSB (USB, LSB), CW) transceiver.
- Microprocessor controlled VFO and full variety of auxiliary functions.
- FM circuitry based on KENWOOD's advanced technology and outstanding SSB quality.
- Built-in VOX.
- Built-in side tone and CW circuitry capable of semi-break-in operation.
- Easy-to-operate 1 band, 1 MHz VFO stops at 999.98 kHz or is continuously adjustable (endless system).

2. Built-in digital display that indicates operating frequency in all modes.
- Digital display equipped with easy-to-read green phosphor tubes.
- 7-digit digital display that directly reads down to 100 Hz.
- Frequency indicator that reads out carrier positions when mode of operation is changed.
- Indicates fixed channel (stores any given frequency) and call channel frequencies, besides VFO A and B frequencies.
- Digital display indicates which VFO (A or B) is in use, fixed channel numbers (1 through 8).
- The use of display select circuit turns off the 100 Hz digits in FM mode.

3. Dependable electrical and mechanical functions.
- VFO frequencies are switchable in 2 speeds, SLOW (in 20 Hz steps) and FAST (in 200 Hz steps).
- VFO knob equipped with variable torque mechanism.
- Pushbutton band select switches (UP and DOWN) that shift up and shift down frequency between 144 MHz and 440 MHz in 12 bands at 1 MHz intervals.
- Wide band design for both transmitter and receiver that eliminates the need for tuning the RF circuits.
- Panel layout based on human engineering.
- Full variety of indicating functions to check operating conditions (Pilot lamps: ON AIR, Hi/LOW (FM transmit), F-LOCK, RIT, SLOW/FAST, Back-up power ON/OFF).
- Amplified type AGC and ALC circuits that maintain receive and transmit outputs at constant level without distortion.

4. A multitude of auxiliary functions for more enjoyable operation.
- The use of RAM memory system microprocessor enables any given frequencies to be stored in or cleared from fixed channels (8 CH).
- Built-in back-up power circuit to keep data stored at all times.
- Built-in scan and search circuits.
- RIT circuit functions on VFO, fixed channels and call channel.
- Adoption of frequency lock circuit.
- KENWOOD's unique noise blanker (NB) circuit to eliminate pulse type noise.
- Equipped with two meters, one is an "S" meter (with RF/ALC selector) and the other is a center meter for use on FM.
- RF power HIGH/LOW selecting function provides convenience in transmission with local stations.
- Auxiliary (AUX) socket.

5. Designed for fixed and mobile station services.
- AC/DC 2-way power operation.
- Equipped with a grip for carrying convenience.
- Sufficient AF output power (2.5W/4Ω).
- Built-in large sized speaker (7.5 cm). External speaker connecting jack.

CIRCUIT DESCRIPTION

GENERAL

This unit is a high class home transceiver having All Mode VHF (2 m) UHF (70 cm) Bands designed for amateur radio stations.

By microcomputer control, it covers the amateur bands of 144 MHz ~ 146 MHz, 430 MHz ~ 440 MHz. The modes of the radio waves are A_1, A_{3j}, and F_3.

FREQUENCY CONFIGURATION

The unit consists of frequency composition shown in Fig. 1. In Table 1, the oscillating frequencies of each oscillating circuit are shown.

Table 1. Oscillator frequency of each oscillator circuit

Unit	Mode/Frequency	Oscillator Frequency
CAR unit	USB, C W – R	8.8315 MHz
	LSB	8.8285 MHz
	FM	8.830 MHz
	CW-T	8.8307 MHz
IF unit	USB, LSB, CW	30.430 MHz
IF unit (MIX unit)	430 MH band	15.8888 × 18 MHz
		16.1666 × 18 MHz
IF unit	FM TX	21.6 MHz
RF unit	FM RX	22.055 MHz
VCO unit	All mode	122.4 ~ 127.4 MHz

With the exception of FM transmission, all modes adopt the double conbersion system.

In SSB or CW transmit mode, the CAR oscillator frequency (8.83 MHz) is modulated by audio signal to obtain 8.83 MHz in the 1st IF. This signal is mixed with 30.43 MHz to obtain 21.6 MHz in the 2nd IF.

In FM transmit mode, the 21.6 MHz crystal oscillator circuit in the IF unit is directly modulated.

The 122.4 MHz band of VCO is mixed with the 21.6 MHz of the 2nd IF to obtain a 144 MHz band heterodyne signal which is fed to the final unit. The 430 MHz band heterodyne signal is mixed with the 286 MHz (or 291 MHz) band, 15.8888 MHz (or 16.1666 MHz) local oscillator frequency multiplied by 18, and the VCO frequency of 122.4-127.4 MHz to obtain a heterodyne signal of 408.4-418.4 MHz. This signal is mixed with 21.6 MHz to obtain a signal of 430 MHz band which is fed to the final unit.

In receive mode, the signal is RF amplified and mixed with the band heterodyne signal to obtain 21.6 MHz in the 1st IF. In SSB or CW mode, the signal is mixed with 30.430 MHz to obtain 8.83 MHz in the 2nd IF.

In FM mode, the signal is mixed with 22.055 MHz to obtain 455 kHz in the 2nd IF.

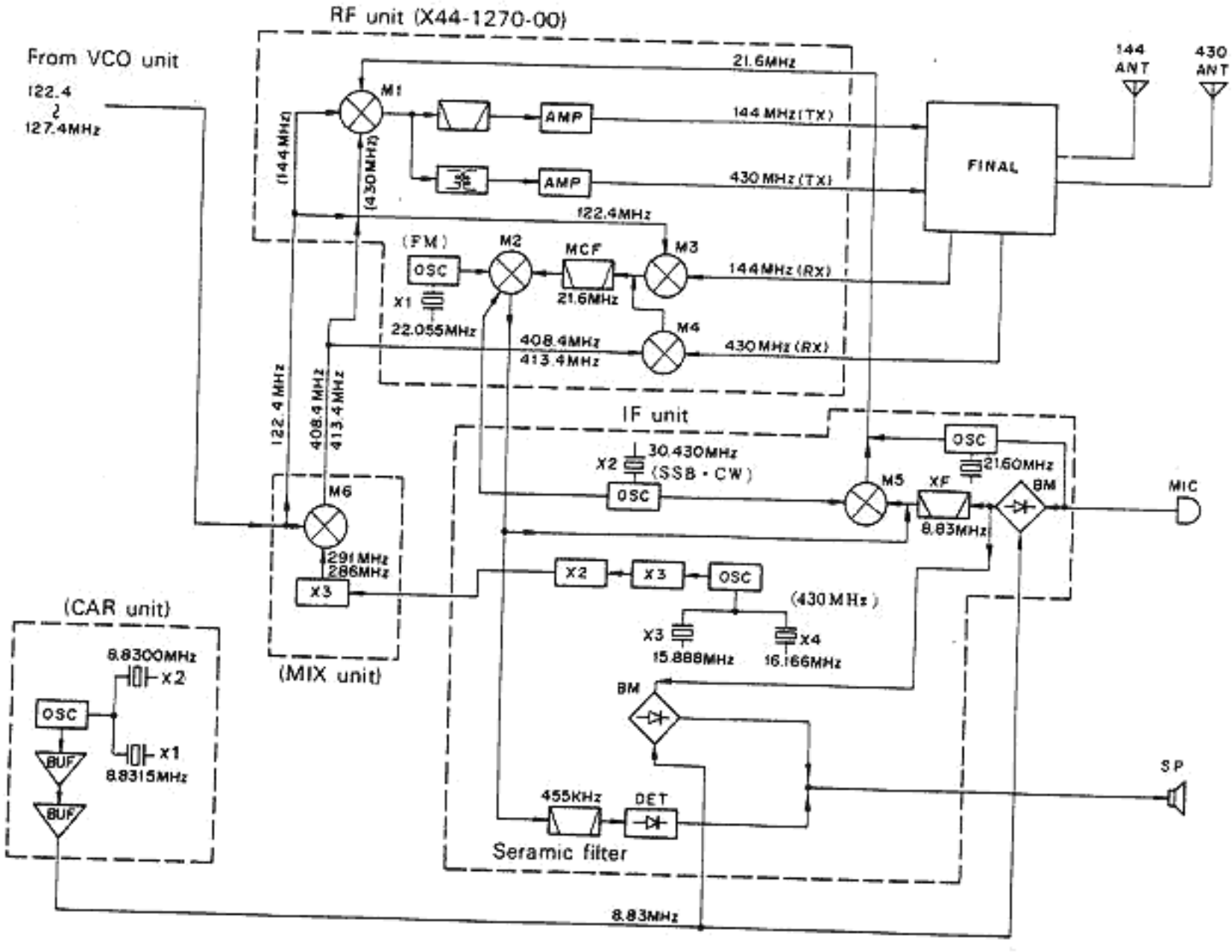

Fig. 1 Frequency configuration

CIRCUIT DESCRIPTION

Table 16. Functions of Digital Unit IC38 MN 9004

Pin No.	Pin	Input signal	Output signal	Description
1	VSS	○		Earth.
2	CO11		○	Count prohibited at FIX channel, scan, band and H.H.
3	CO10		○	H at scan, search, empty FIX channel.
4	CO9		○	H at scan.
5	CO8		○	Buzzer output. FIX channel, figure latch, strobe signal.
6	GO7		○	Buzzer output, FIX channel, figure latch, strobe signal.
7	CO6		○	Delivers output execpt at 20 μSec selector signal
8	CO5		○	
9～13	CO4～0		○	Strobe signals of 100 kHz, 10 kHz, 1 kHz, 100 Hz, 10 Hz.
14～17	AI 3～0	○		A input
18～21	BI 3～0	○		B input
22～25	E00～3		○	Data outputs of 100 kHz, 10 kHz, 1 kHz, 100 Hz, 10 Hz.
26	TST	○		Not used, open.
27	RST	○		H level
28	CSLCT	○		Same as pin 2
29	SNSO	○		
30	SNSI	○		Count input
31～34	DO0～3		○	Band data, binary output.
35～38	DO4～7		○	FIX channel figure, binary output.
39	VDD	○		5V
40	OSC	○		Clock signal, 400 kHz

Table 17. Functions of Digital Unit (X54-1460-00)

Pin		Input signal	Output signal	Description
J2	CA		○	Normally grounded.
	F1	○		Open at FIX, normally grounded.
	9B	○		H at display of 9th digit.
	F2		○	L at FIX, VFO-B, H at VFO-A.
J3	DD		○	Digial display output. Data output by time division.
	DC		○	
	DB		○	
	DA		○	
	B1	○		Frequency disappears at FIX empty.
	SA		○	Digit scan signal.
	SB		○	
	SC		○	
J4	F	○		L at FIX empty.
	PC		○	PLL band data output. Output of 1～5 at binary code.
	PB		○	
	PA		○	
	SN	○		H at scan ON, normally L.
	FM2			
	SD	○		H at FAST + 10 kHz, S/F LED ON.
	SQ	○		L at squelch ON, H at OFF.
	F3	○		L at VFO A, B.
	F1	○		Open at FIX, normally grounded.
	SF	○		L by SLOW, FAST switch. Normally open.
	CC	○		Normally grounded.
	LK	○		L at F lock, normally open.
J5	CB	○		VFO end or endless signal.
	SH	○		H at search switch ON.
	ME	○		H at FIX, memory switch ON.
	V5	○		VFO pulse
	V4	○		
	V3	○		
	V2	○		
	V1	○		
J6	ATX		○	
	ST		○	H at FIX empty, scan, search.
	UH		○	100 MHz → 1 and 10 MHz → 4 at L. 100 MHz → 4 and 10 MHz → 3 at H.
	291		○	H at 435～439. 144 MHz band at L.
	286		○	H at 430～434. 144 MHz band at L.
	BZ		○	H at buzzer ON.
	RL	○		8V input at TX.
J7	BP	○		Normally 13.8V. More than 7.5V at backup time.
	Z	○		5V
J8	01～03		○	Frequency data output to PLL.
	10～13		○	
	20～23		○	
	30～33		○	
	40～43		○	
J9	FC	○		L at press of FIX.
	UD	○		Band stops at FIX. Open at FIX.
	BD	○		L at press of band DOWN.
	BU	○		L at press of band UP.

CIRCUIT DESCRIPTION

(From page 11.)

a. Selector signal output to IC34 and 35.
b. Transmit prohibit signal at scan, search and FIX empty.
c. Latch strobe signal.
d. 10 Hz ~ 100 kHz data output.
e. Band data output.
f. FIX channel figure output.
g. Buzzer pulse output.

ALL ASS'Y UNIT (X60-1050-00)

The PLL circuit includes VCO, A LOOP and B LOOP units.

1. B LOOP Unit

A signal of 13.215 MHz is oscillated by Q4. The 10 and 100 kHz data from the digital unit are converted into an analog signal as a bias signal to D2 by the resistors R25-37 to control the frequency of 0-980 Hz. The frequency is doubled by Q5 as a HET signal to the B LOOP. Q1 is VCO oscillator for B LOOP. The signal from the oscillator passes through the buffer Q3 and is mixed with CAR 8.83 MHz by IC1, then the frequency difference is mixed with HET signal for B LOOP by IC2. The1 kHz-100 kHz data from the digital unit is divided by IC3 to produce 1 kHz signal. This signal is compared in phase with the reference signal from A LOOP by IC4. The output passes through the low pass filter Q6-8 to produce VCO control voltage for B LOOP to control Q1. The output from Q1 passes through the buffer Q2 to produce the output to B LOOP.

2. A LOOP

A signal of 14.190 MHz is oscillated by Q1. This signal is doubled by Q2 and tripled by Q3 to produce HET signal for A LOOP. The signal from the VCO unit is mixed with the HET signal by IC1, amplified by IC2 and then mixed with the signal from B LOOP by IC3.
The BAND data from the digital unit is fed to IC4 so that the signal from IC3 is divided into 100 kHz.
A signal of 8 MHz is oscillated by IC5. This signal is divided to obtain 100 kHz signal as reference signals for B LOOP and A LOOP, and is compared in phase by IC6. The output from IC6 is VCV which ontrols VCO of the VCO unit.
Analog signal from the BAND data is obtained from IC7. This signal is tuned by T1 and T2 to obtain 5 MHz bandwidth.
When the signal is unlocked, D4 or D5 is ON, producing UK signal of H level.

3. VCO Unit (X50-1520-00)

Frequencies are controlled by the VCV voltage of VCO (Q1). The signal passes through the buffer Q2 and is fed to A LOOP.
Q3 and Q4 form the buffer of VCO. When the signal is unlocked, the UK signal turns Q9 to ON and turns Q8 to OFF, so the buffer stops and no output is obtained from the VCO terminal.
Q5 and Q6 form a circuit to short the VCV terminal when the voltage at PL8 drops momentarily.

When the signal is unlocked during adjustments or repairs, turn OFF the power switch and then turn ON. The signal will then be locked.

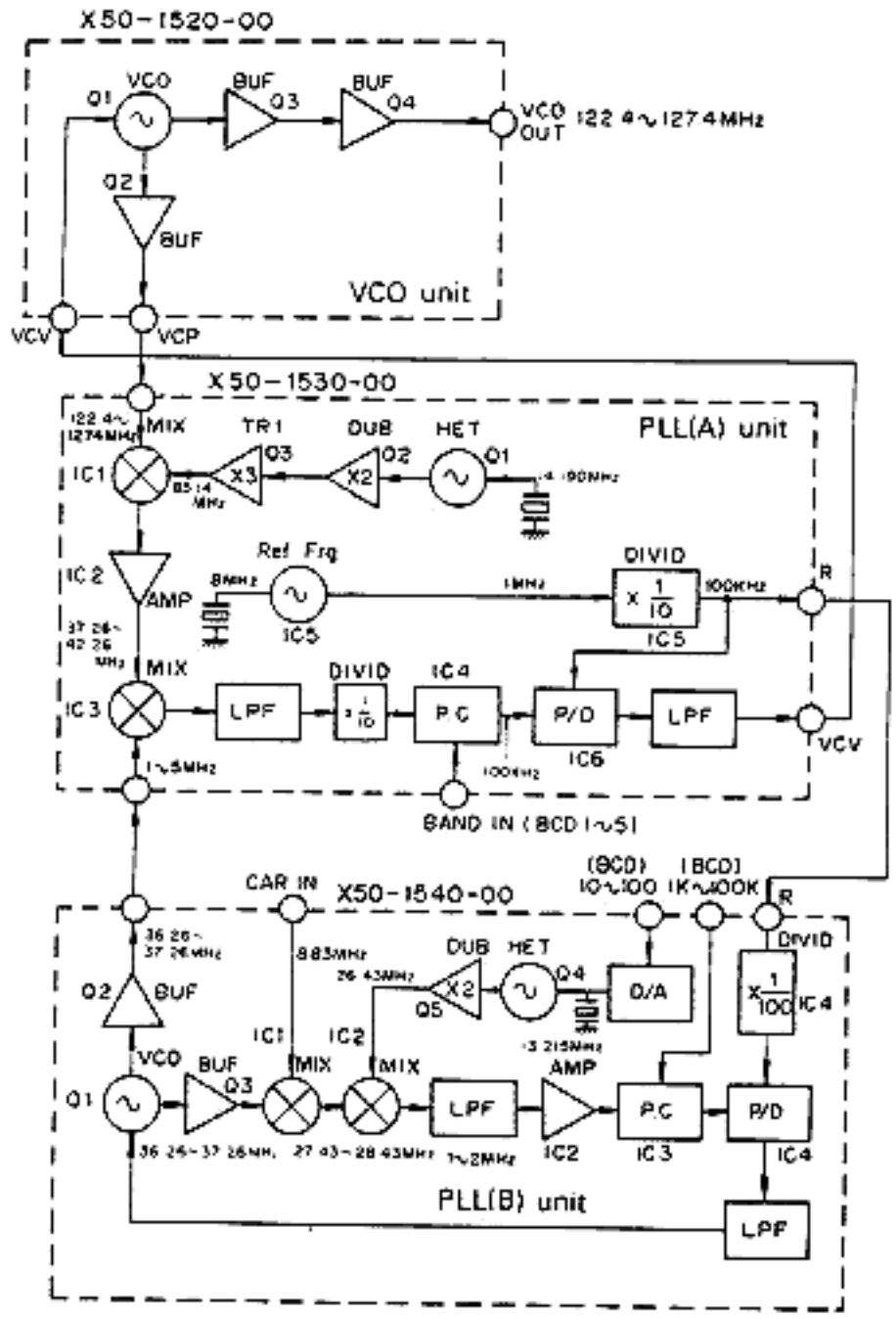

Fig. 18 Block diagram of PLL unite

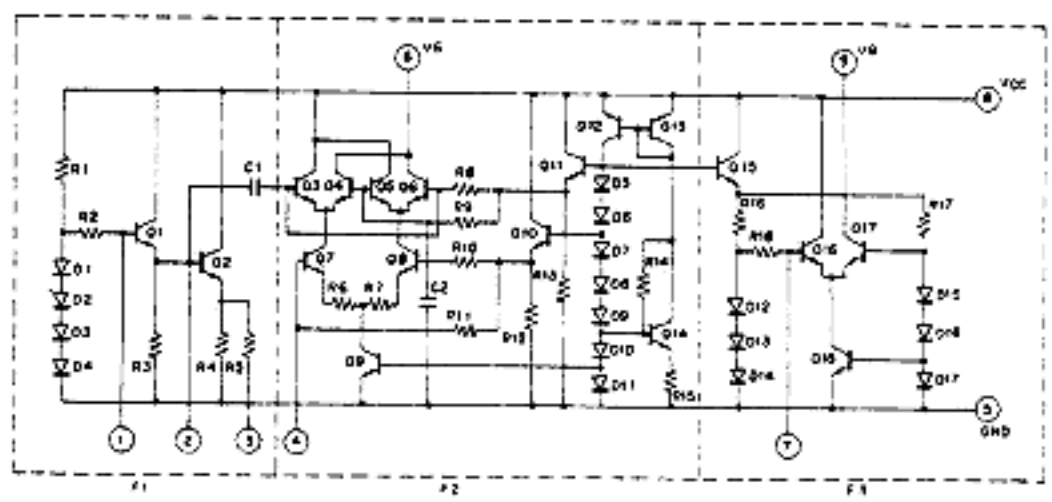

Fig. 19 PLL(A)IC3 PLL(B)IC2(TA7310P)

CIRCUIT DESCRIPTION

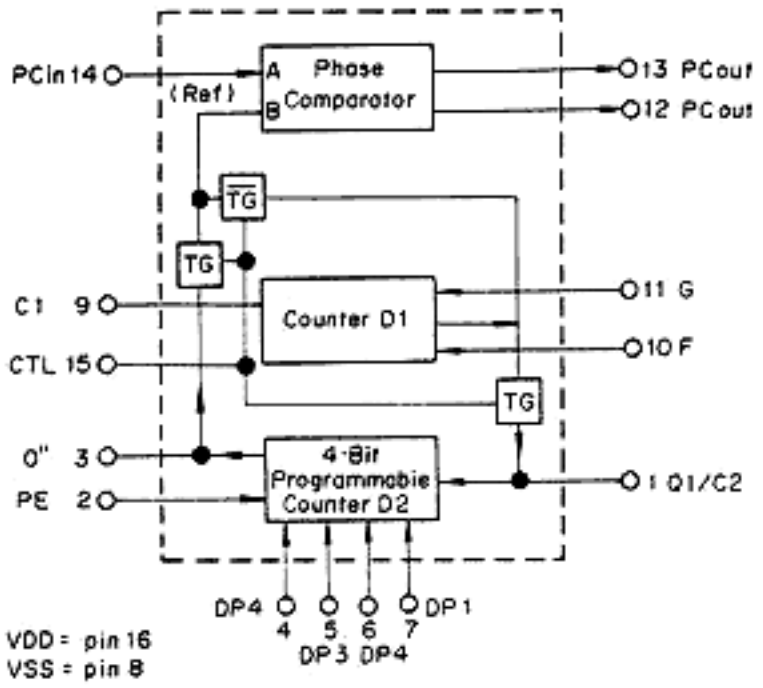

Fig. 20 PLL(B)IC4(MC14568B)

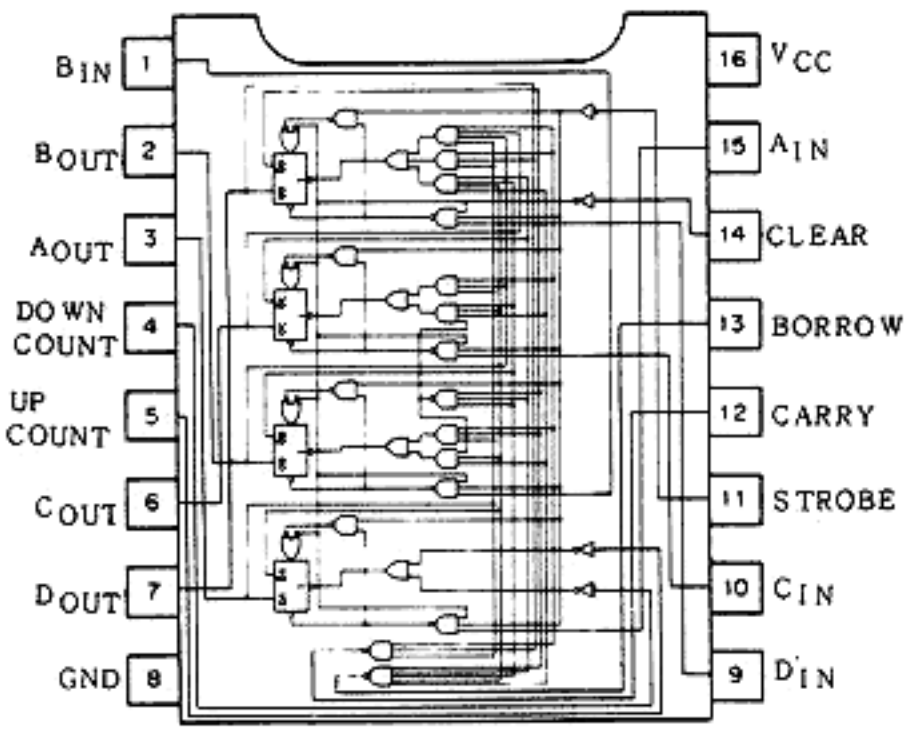

PLL(A)IC4(TD34192BP)

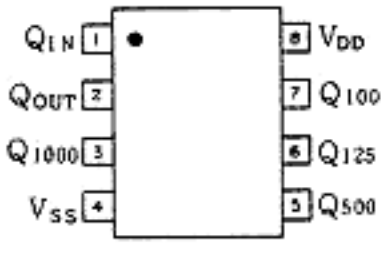

PLL(A)IC5(SM6422A)

Fig. 21

Truth Table TD34192BP

Input t_n								Output t_{n+1}					
Count -up pulse	Count -down pulse	Strobe	Clear	Input				Output				Borrow	Carry
				A	B	C	D	A	B	C	D		
*	*	0	0	A_{IN}	B_{IN}	C_{IN}	D_{IN}	A_{IN}	B_{IN}	C_{IN}	D_{IN}	Note 1	Note 1
*	*	0	0	1	0	0	1	1	0	0	1	Note 1	Note 1
*	*	*	1	*	*	*	*	0	0	0	0	Note 1	Note 1
1	1	1	0	*	*	*	*	1	0	0	0	1	1
2	1	1	0	*	*	*	*	0	1	0	0	1	1
3	1	1	0	*	*	*	*	1	1	0	0	1	1
4	1	1	0	*	*	*	*	0	0	1	0	1	1
5	1	1	0	*	*	*	*	1	0	1	0	1	1
6	1	1	0	*	*	*	*	0	1	1	0	1	1
7	1	1	0	*	*	*	*	1	1	1	0	1	1
8	1	1	0	*	*	*	*	0	0	0	1	1	1
9	1	1	0	*	*	*	*	1	0	0	1	1	0
0	1	1	0	*	*	*	*	0	0	0	0	1	1
1	1	1	0	*	*	*	*	1	0	0	0	1	1
↕	↕	↕	↕	↕	↕	↕	↕	↕	↕	↕	↕	↕	↕
8	1	1	0	*	*	*	*	0	0	0	1	1	1
9	1	1	0	*	*	*	*	1	0	0	1	1	1
1	8	1	0	*	*	*	*	0	0	0	1	1	1
1	7	1	0	*	*	*	*	1	1	1	0	1	1
1	6	1	0	*	*	*	*	0	1	1	0	1	1
↕	↕	↕	↕	↕	↕	↕	↕	↕	↕	↕	↕	↕	↕
1	1	1	0	*	*	*	*	1	0	0	0	1	1
1	0	1	0	*	*	*	*	0	0	0	0	0	1
1	9	1	0	*	*	*	*	1	0	0	1	1	1

Note 1: The state of BORROW Output and CARRY Output will depend on the state of A, B, C, D Output and Down Count/Up Count Inputs.
2: * ; 0 or 1
3: t_n ; Bit time prior to the time the clock input changes from "0" to "1".
4: T_{n+1} : Bit time after the clock input changed from "0" to "1".

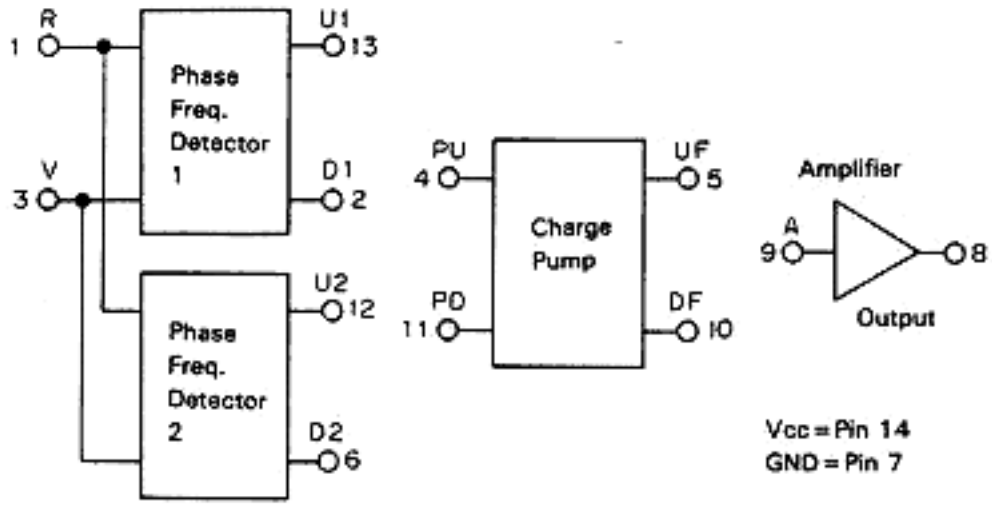

Fig. 22 PLL(A)IC6(MC4044P)

SEMICONDUCTOR/FILTER DATA

* In case of replacing power transistors of the FINAL, always use those based on TRIO Specifications.

Table 18. 2SC2381 Ratings

Name	2SC2381, TRIO									
Application	UHF band power amplifier									
Construction	NPN Epitaxial planar type									
Absolute maximum rating (T_a = 25°C)	V_{CBO}	V_{CEO}	V_{EBO}	I_C	I_E	P_C	T_j	T_{stg}		
	35	17	3.5	6	-6	50	175	-65~175		
	V	V	V	A	A	W	°C	°C		
Test condition	T_a = 25 ± 1.5 °C									

Test specification

Item	Condition	Code	Max	Min	Unit	
Collector cut-off current	V_{CB} = 15 V, I_E = 0	I_{CBO}	—	1	mA	
Collector-base break down voltage	I_C = 10mA, I_E = 0	$V_{(BR)CBO}$	35	—	V	
Collector-emitter break down voltage	I_C = 25mA, I_B = 0	$V_{(BR)CEO}$	17	—	V	
Emitter-base break down voltage	I_E = 1 mA, I_C = 0	$V_{(BR)EBO}$	35	—	V	
DC amplifier factor	V_{CE} = 5 V, I_C = 3 A	h_{FE}	10	—	—	
Collector output capacity	V_{CB} = 10V, I_E = 0, f = 1MHz	C_{ob}	—	—	PF	
Output power	V_{CC} = 12.6 V, f = 470 MHz P_i = 10W, $\eta_C \geq$ 60%	P_O	25	—	W	

Table 19. 2SC2380 Ratings

Name	2SC2380, TRIO									
Application	UHF band power amplifier									
Construction	NPN Epitaxial planar type									
Absolute maximum rating (T_a = 25°C)	V_{CBO}	V_{CEO}	V_{EBO}	I_C	I_E	P_C	T_j	T_{stg}		
	35	17	3.5	2.8	2.8	30	175	-65~175		
	V	V	V	A	A	W	°C	°C		
Test condition	T_a = 25 ± 1.5 °C									

Test specification

Item	Condition	Code	Max	Min	Unit	
Collector cut-off current	V_{CB} = 15 V, I_E = 0	I_{CBO}	—	1.5	mA	
Collector-base break down voltage	I_C = 2 mA, I_E = 0	$V_{(BR)CBO}$	35	—	V	
Collector-emitter break down voltage	I_C = 10mA, I_B = 0	$V_{(BR)CEO}$	17	—	V	
Emitter-base break down voltage	I_E = 200 μA, I_C = 0	$V_{(BR)EBO}$	3.5	—	V	
DC amplifier factor	V_{CE} = 5 V, I_C = 1.5 A	h_{FE}	10	—	—	
Collector output capacity	V_{CB} = 10V, I_E = 0, f = 1MHZ	C_{ob}	—	40	PF	
Output power	V_{CC} = 12.6 V, f = 470MHz P_i = 3 W, $\eta_C \geq$ 60%	P_O	11	—	W	

Table 20. 2SC2103A Ratings

Name	2SC2103A, TRIO									
Application	UHF band power amplifier									
Construction	NPN Epitaxial planar type									
Absolute maximum rating (T_a = 25°C)	V_{CBO}	V_{CEO}	V_{EBO}	I_C	I_E	P_C	T_j	T_{stg}		
	40	18	4.0	6.0	-6.0	50	175	-65~175		
	V	V	V	A	A	W	°C	°C		
Test condition	T_a = 25 ± 1.5 °C									

Test specification

Item	Condition	Code	Max	Min	Unit	
Collector cut-off current	V_{CB} = 15 V, I_E = 0	I_{CBO}	—	1	mA	
Collector-base break down voltage	I_C = 10mA, I_B = 0	$V_{(BR)CBO}$	40	—	V	
Collector-emitter break down voltage	I_C = 25mA, I_B = 0	$V_{(BR)CEO}$	18	—	V	
Emitter-base break down voltage	I_E = 1 mA, I_C = 0	$V_{(BR)EBO}$	4	—	V	
DC amplifier factor	V_{CE} = 5 V, I_C = 3 A	h_{FE}	10	—	—	
Collector output capacity	V_{CB} = 10V, I_E = 0, f = 1 MHz	C_{ob}	—	80	PF	
Output power	V_{CC} = 12.5 V, f = 175 MHz P_i = 4.2W, $\eta_C \geq$ 60%	P_O	27	—	W	

Table 21. Filter L72-0312-05(CFL-455F2)Ratings

Item	Specification
Nominal center frequency	455 kHz
3 dB bandwidth	±5 kHz or more
6 dB bandwidth (From 455 kHz)	±7.5 kHz or more
70 dB bandwidth	±16 kHz or less
Guaranteed attenuation	55 dB or more 40 dB or more
Ripple	3 dB or less
Loss	4 dB or less
Impedance	1.5 kΩ

FILTER/OPTION DATA

Table 22. Ratings of Crystal Filter L71-0209-05(21G20A)

Item	Specification
Nominal center frequency	21.6 MHz
Pass bandwidth	±10 kHz or more at 3 dB
Attenuation bandwidth	±35 kHz or less at 18 dB
Ripple	0.5 dB or less
Loss	2 dB or less
Guaranteed attenuation	30 dB or more at a range within ±1 MHz (The spurious output shall be at 18 dB or more.)
Terminal impedance	2 kΩ±10%//1PF±10%

Table 23. Ratings of Crystal Filter L71-0208-05(YK-88S)

Item	Specification
Nominal center frequency	8830 kHz
Center frequency deviation	Within ±150 Hz at 6 dB
Pass bandwidth	±1.2 kHz or more at 6 dB
Attenuation bandwidth	±1.5 kHz or less at 20 dB ±2.2 kHz or less at 60 dB ±3 kHz or less at 80 dB
Ripple	2 dB or less
Loss	6 dB or less
Guaranteed attenuation	80 dB or more within ±1 MHz.
Impedance	600Ω±5% // 15PF±5% for both input and output

Option

• BU-1 (Outside Battery Case)

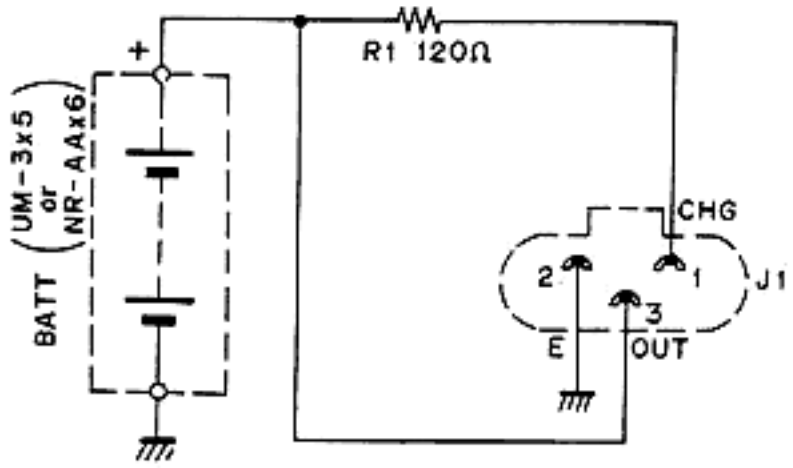

Fig. 26 BU-1 Circuit

Table 25. BU-1 Parts List

Parts Name	Parts No.	Remarks
Resistor (R1)	RC05GF2H121J	120Ω ±5% 1/2W
Power Jack (J1)	E 08 — 0304 — 05	
Power Plug	E 30 — 1624 — 05	
Battery case	J 19 — 1319 — 03	
Dummy cell	W 09 — 0002 — 05	

In order to operate by DC

Since this unit is not equipped with DC power source cable, in case of DC operation, it is necessary to prepare a DC power source cable like the one shown in Fig. 25.
Since this cable is not equipped with a fuse, in case it is used as that for TS-770, insert an 8A fuse.
DC power source cable and fuses are handled by our business offices or service centers.

DC cable ASSY parts No. X42-1210-00

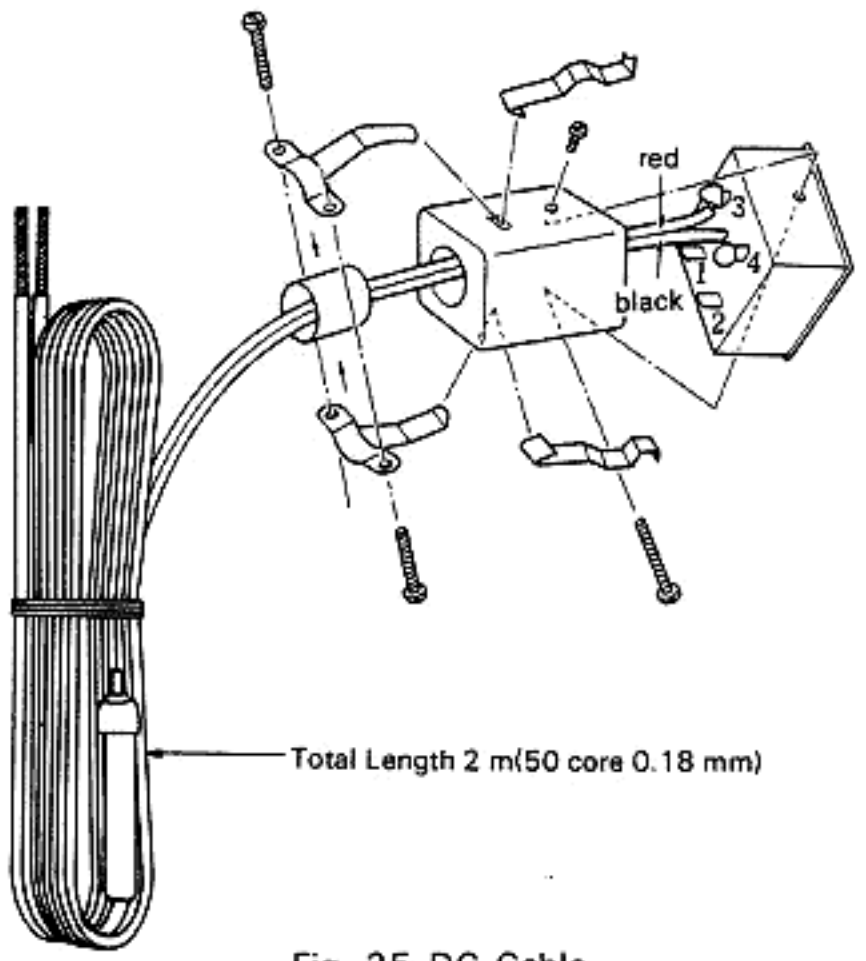

Fig. 25 DC Cable

OUTSIDE VIEWS

FRONT PANEL

Push knob (C) × 2 CALL (K27 − 0404 − 04)

Knob(H)(K21 − 0309 − 14) RF GAIN

Meter(A) SM (B31 − 0613 − 04)

Dial escutcheon (B07 − 0612 − 05)

Panel escutcheon (B01 − 0617 − 05)

Front glass (B10 − 0614 − 05)

LED SEL − 103W (V11 − 0430 − 05)

Meter (B) CM (B31 − 0614 − 05)

Knob(C) × 3RIT FUNCTION (K21 − 0279 − 14)

Lever knob(A) × 4 (K23 − 0707 − 04)

Knob(G) (K21 − 0308 − 14) AF GAIN × 3

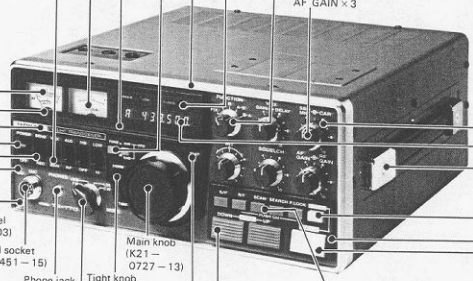

Name plate (B43 − 0622 − 04)

Indicating tube (V40 − 7760 − 86

Lever knob(B)STBY (K23 − 0705 − 04)

Handle (K01 − 0402 − 05)

LED PR2112D (V11 − 7260 − 66)

Ornamental panel (A21 − 0722 − 03)

Push knob(A) (K27 − 0402 − 04)

Switch grill (B07 − 0618 − 05)

4P Metal socket (E06 − 0451 − 15)

Main knob (K21 − 0727 − 13)

Paddle switch (POWER) (S44 − 1404 − 05)

Phone jack (E11 − 0034 − 25)

Tight knob (Brake) (K23 − 0714 − 04)

Band knob(A) (K29 − 0710 − 05)

Knob(MODE) (K21 − 0742 − 04)

LED PR2112D (V11 − 7260 − 66)

Push knob(B) × 5 (K27 − 0403 − 04)

Band knob(B) (K29 − 0711 − 05)

REAR PANEL

Case(B)upper (A01 − 0729 − 01)

Heat sink C

KEY jack (E11 − 0005 − 15

Rear panel (A23 − 1426 − 02)

Speaker jack (E11 − 0003 − 15)

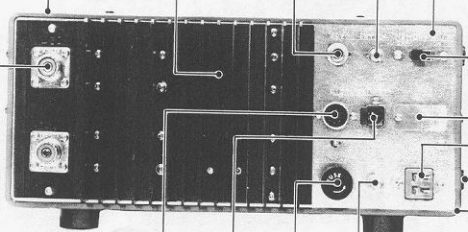

Slide switch (Backup) (S31 − 2027 − 05)

Blind

4P Power socket (E08 − 0409 − 05)

Foots(Small) × 4(ϕ 15) (J02 − 0022 − 05)

Case(A) Lower (A01 − 0728 − 01)

Foot(Large) × 6(ϕ20) (J02 − 0049 − 14)

M type receptacle (E04 − 0109 − 15)

DIN Socket (E06 − 0751 − 05)

Fuse holder (J13 − 0033 − 15)

Power jack 3P (E08 − 0304 − 05)

Screw terminal (E21 − 0007 − 05)

INSIDE VIEWS

TOP VIEWS

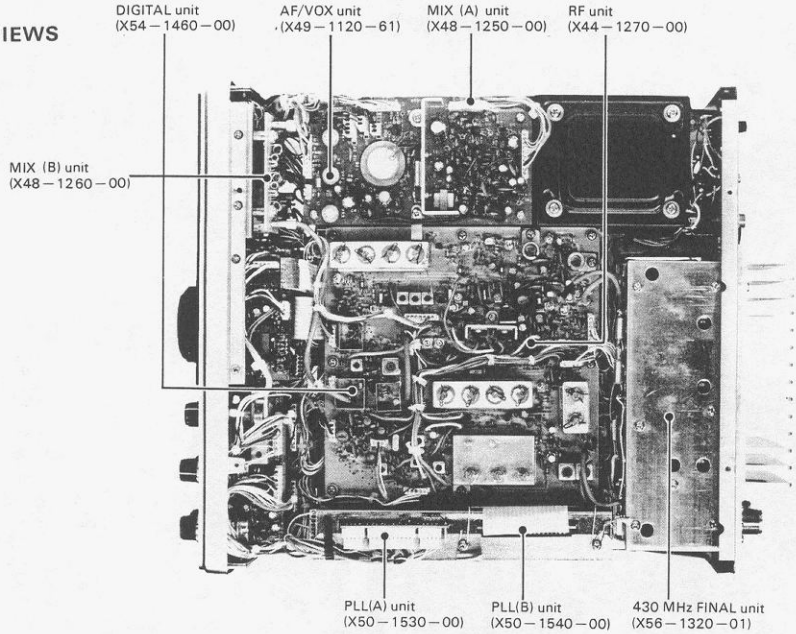

BOTTOM VIEWS

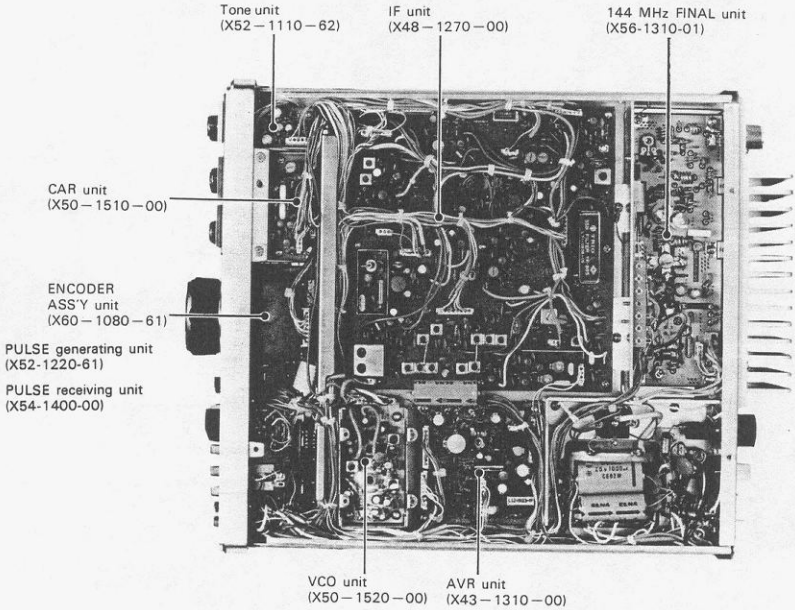

PACKING

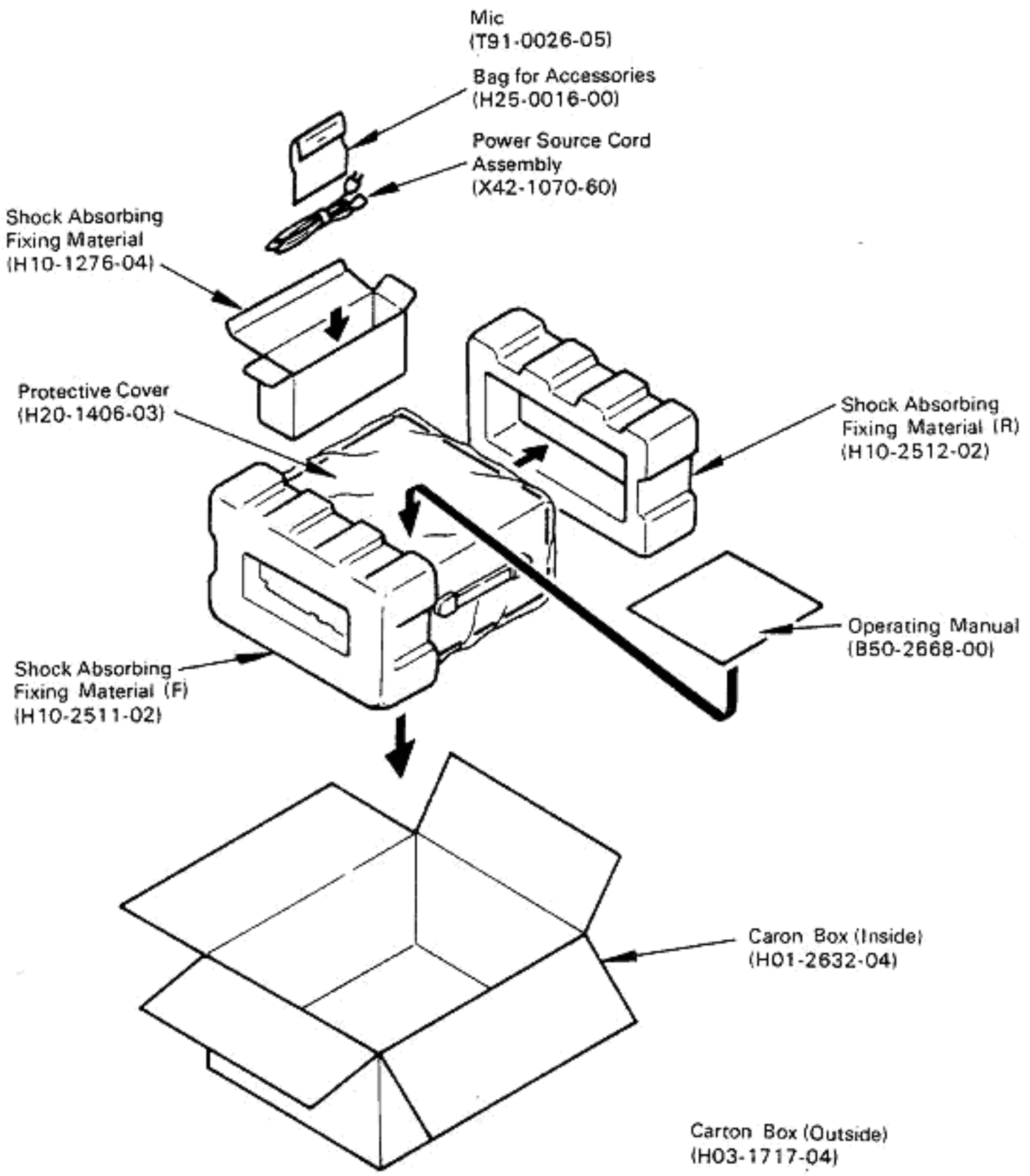

Fig. 23 Packing

Accessories

Name	Parts No.	pcs.
Fuse 2A	F05-2023-05	1
Speaker plug	E12-0001-05	1
Din plug	E07-0751-05	1
Foot	J02-0049-14	2
Screw	N30-4012-41	2

BLOCK DIAGRAM

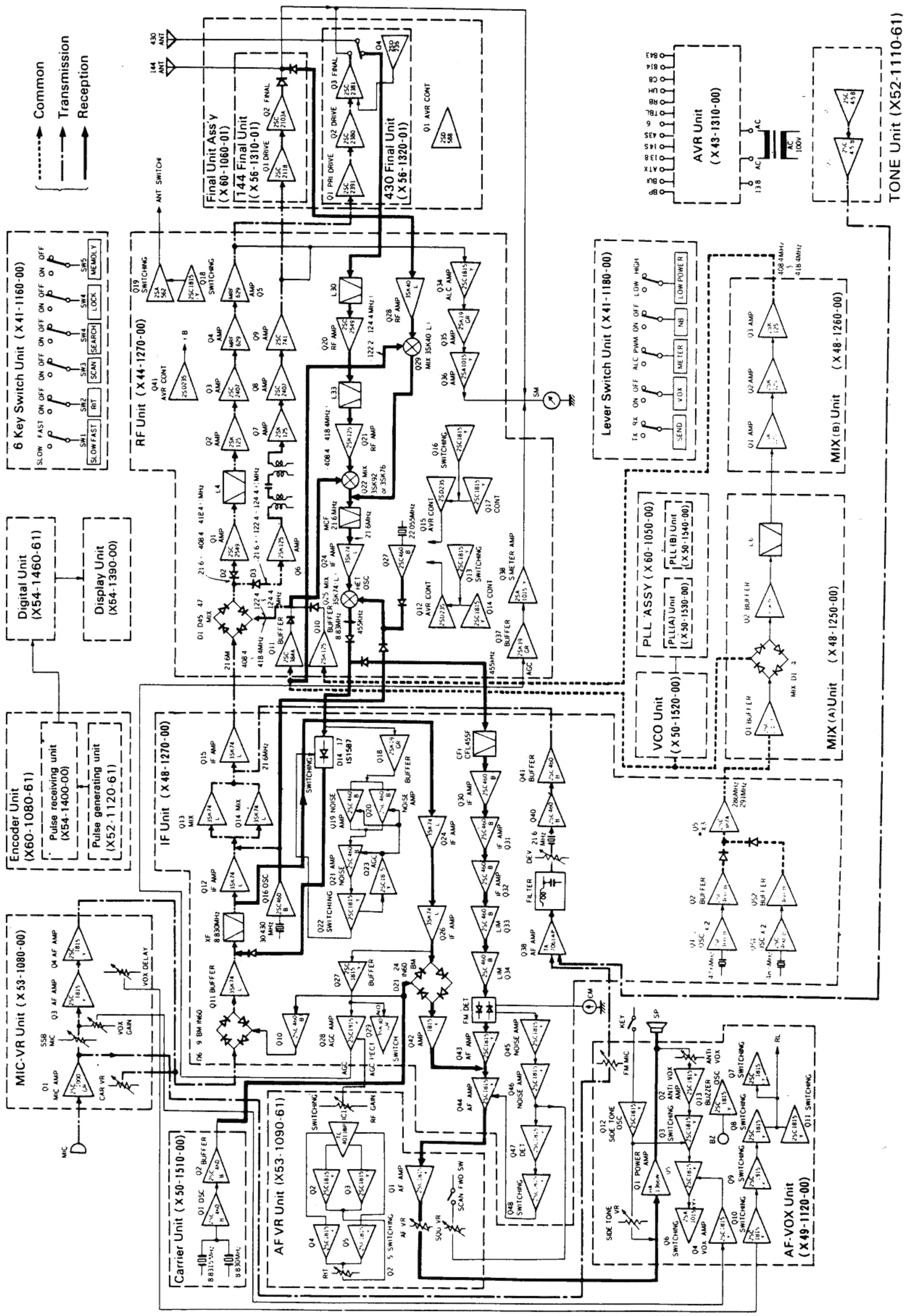

PC BOARD VIEWS

TONE UNIT (X52-1110-62) 35
VCO Unit (X50-1520-00) 35
RF Unit (X44-1270-00) 36
IF Unit (X48-1270-00) 37
PLL(A) Unit (X50-1530-00) 38
PLL(B) Unit (X50-1540-00) 39
6 Key Unit (X41-1160-00) 40
Lever Switch Unit (X41-1180-00) 40
Display Unit (X54-1390-00) 40
AVR Unit (X43-1310-00) 41
AF VR Unit (X53-1090-61) 41
AF VOX Unit (X49-1120-61) 42
MIC VR Unit (X53-1080-00) 42
CAR Unit (X50-1510-00) 43
Pulse Generating Unit (X52-1120-61) 43
Pulse Receiving Unit (X54-1400-00) 43
MIX(A) Unit (X48-1250-00) 44
MIX(B) Unit (X48-1260-00) 44
Printed Circuit (A) (J25-2699-14) 44
Digital Unit (X54-1460-61) 45
144 Final Unit (X56-1310-01) 46
430 Final Unit (X56-1320-01) 46
IF Unit (X48-1220-00) 47
MIX Unit (X48-1230-00) 48

▶ **TONE unit (X52-1110-62)**

Q1,2: 2SC458(B)
D1: 1S1555

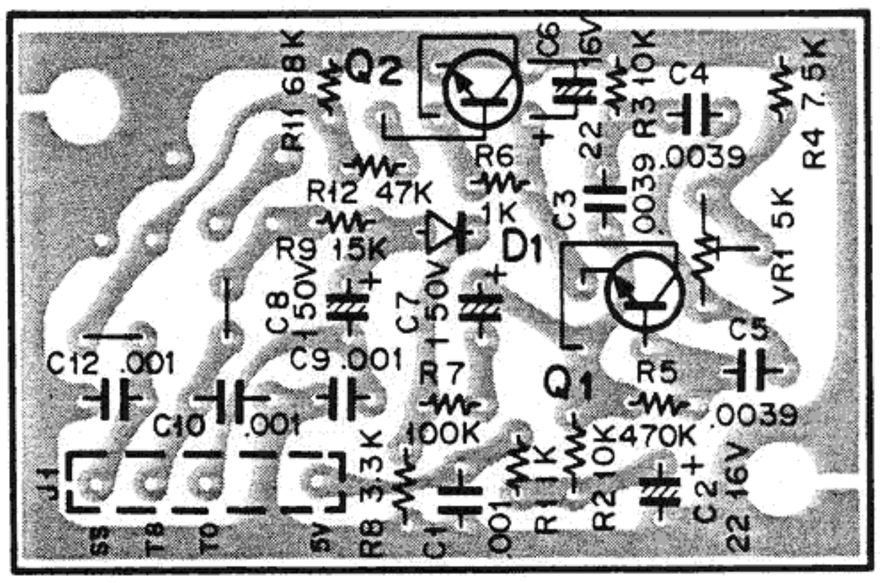

▼ **VCO unit (X50-15200-00)**

Fix this portion in place with silicone.
(Be careful not put any silicone into the core of the coil.)

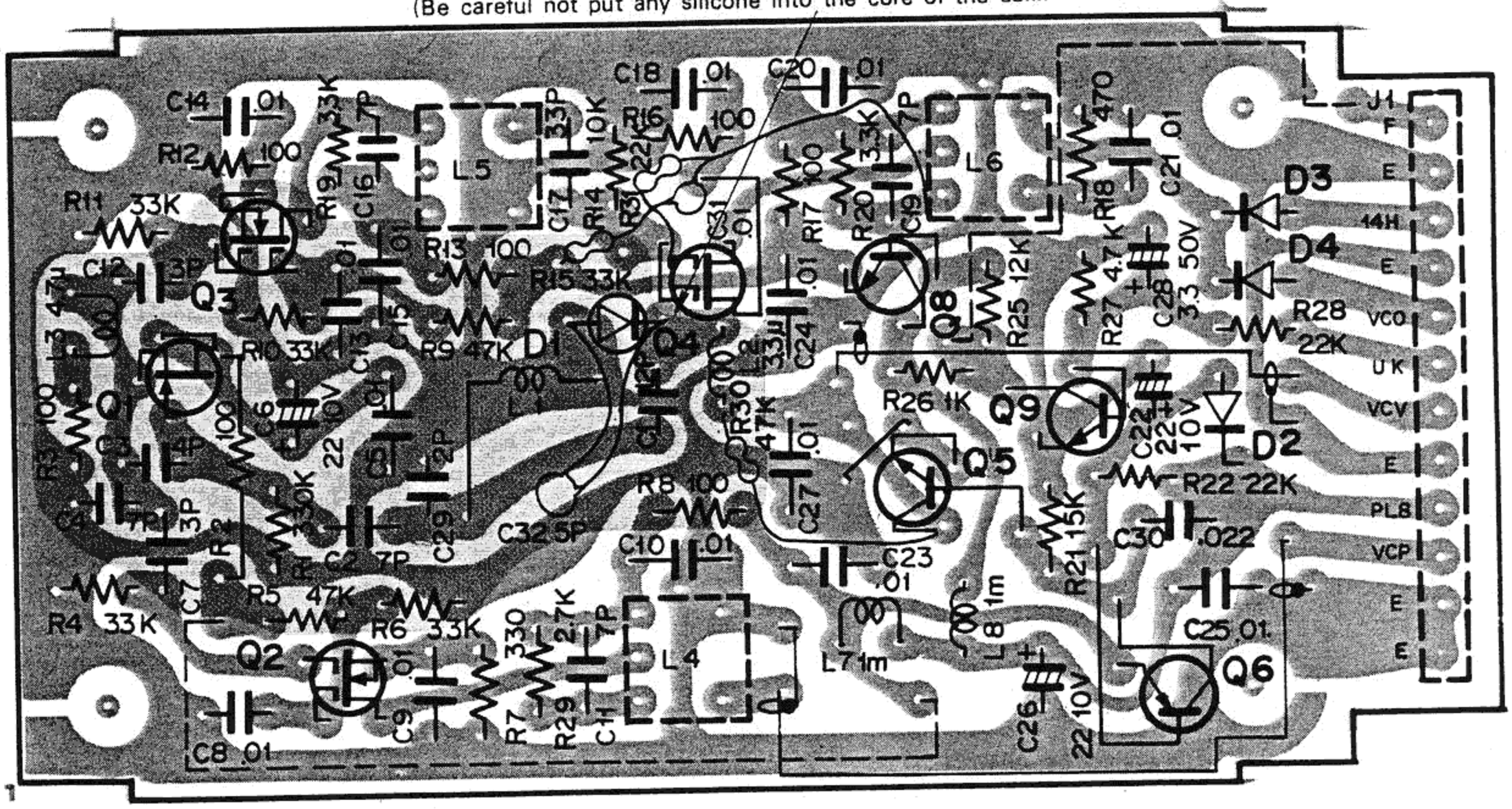

Q1:2SK19(GR) Q2、3:3SK40M Q4:3SK40(L) Q5、9:2SC1815(Y) Q6:2SA1015(Y) Q8:2SC735(Y) D1:1S2208 D2:1N60 D3、4:1S2588

2SA1015(Y)
2SC1815(Y)

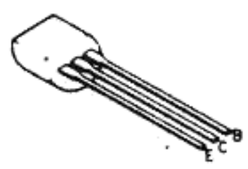

2SC735(Y)

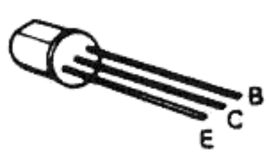

2SK19(GR)

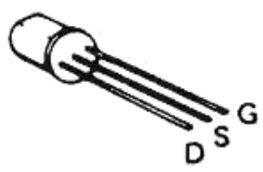

3SK40(L)
3SK40(M)

<Attachment direction of L1>

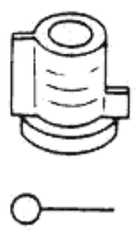

PC BOARD VIEWS

▼ RF unit (X44-1270-00)

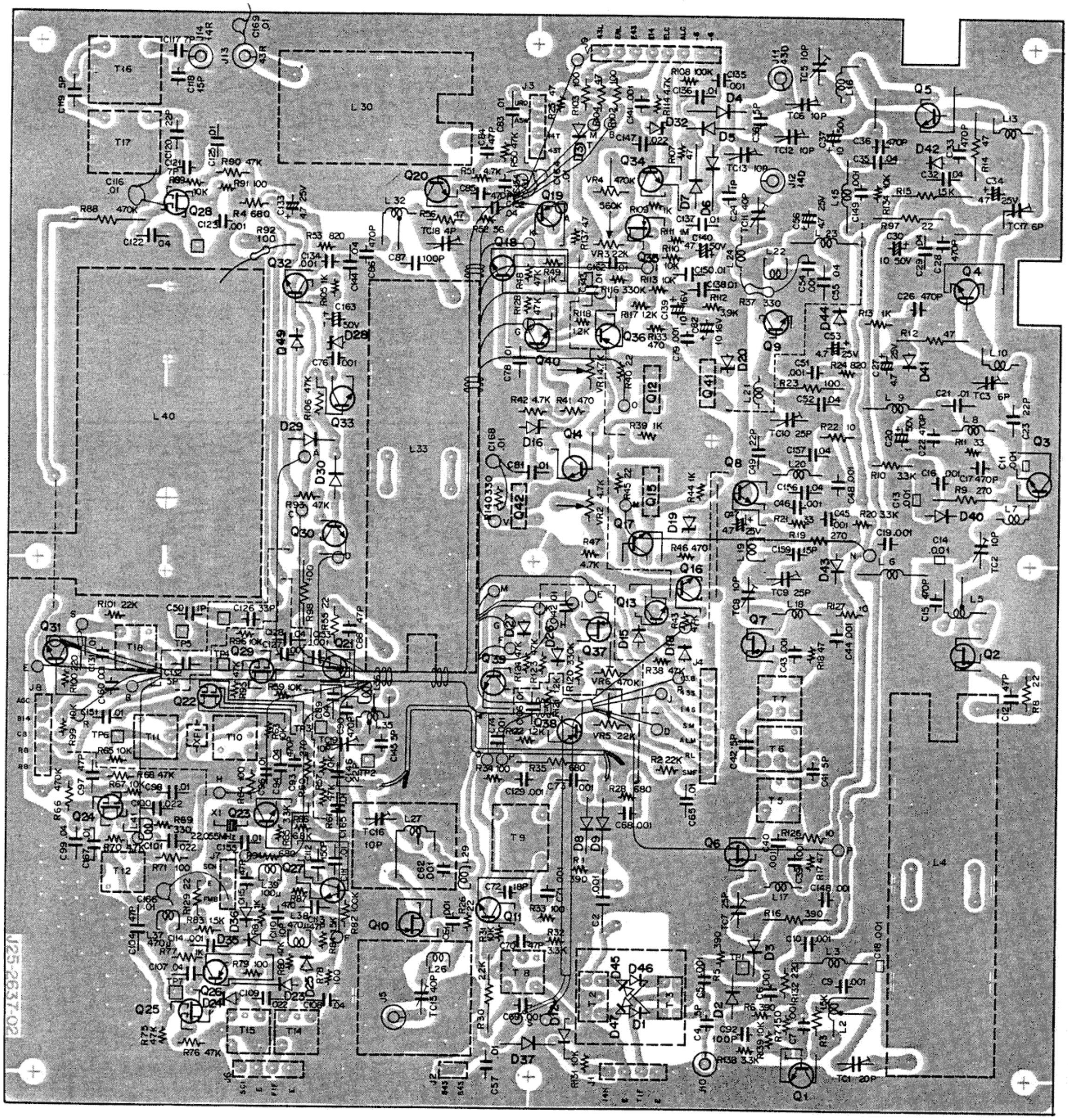

U1、20:2SC2549 Q2、6、7、10、21:2SK125 Q3、8:2SC2407 Q4、5:MRF629 Q9:2SC741 Q11:2SC387A Q12、15、41:2SD235(Y)
Q13、14、16～18、23、30、31、33、34、39、40:2SC1815(Y) Q19:2SA562(Y) Q22:3SK92or3SK76 Q24、25:3SK74(L) Q26、36、38:2SA1015(Y)
Q27:2SC460(B) Q28、29:3SK40(L) Q32:2SC735(Y) Q35、37:2SK19(GR) Q42:2SC496(Y) D1、45～47:1SS97 D2、3、8、9:1S2588
D4～7、25:1N60 D12、23、24、35～37:1S1587 D15、18、26、27、29～31、41、42、44、49:1S1555 D16、19、32:XZ-060 D20:XZ-132
D28:XZ117 D40、43:MV-13

<Attachment direction of diodes>

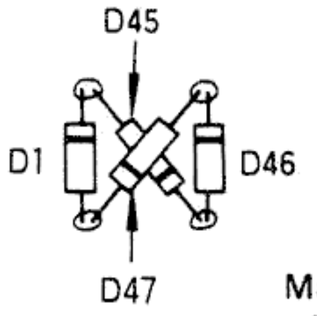

<Attachment method of L4, 30, 33>

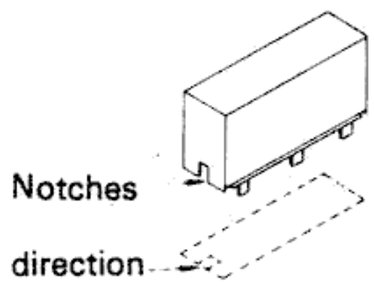

<Attachment direction of T2,3>

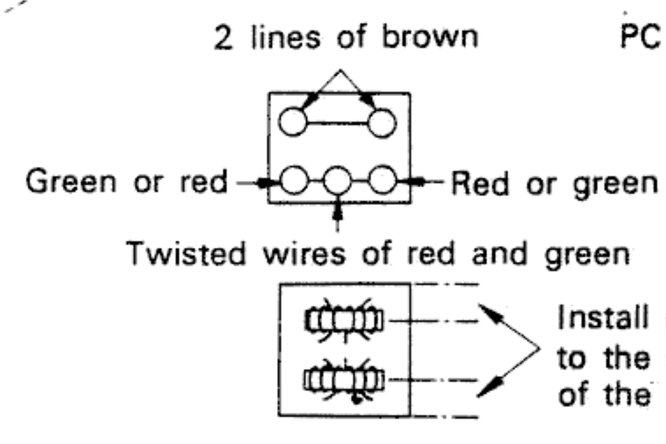

<Attachment method of L40>

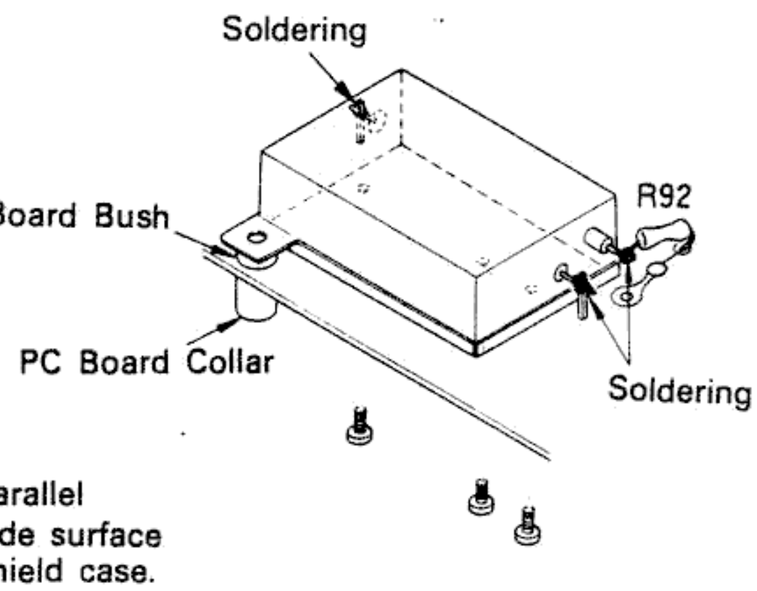

<Attachment method of a through capacitor>

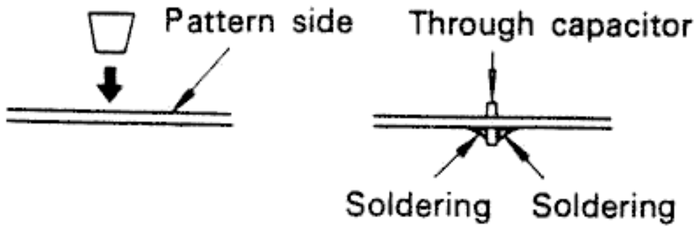

PC BOARD VIEWS

▼ **IF unit (X48-1270-00)** From S/N 004 .... ~

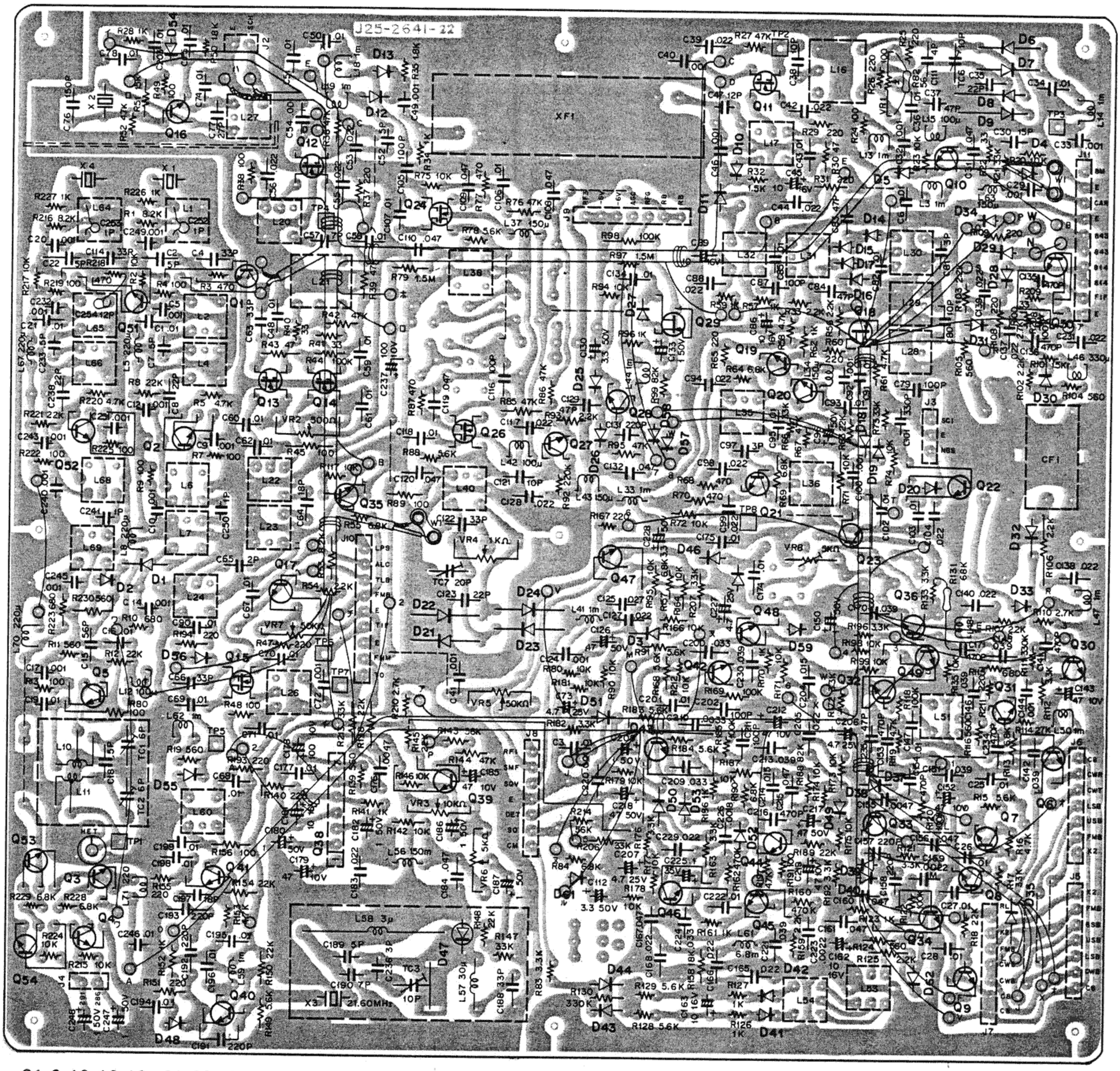

Q1、2、10、16、19～21、30～34、40、41、50～52:2SC460(B) Q3、17、53:2SA1015(Y) Q4、6～9、22、23、27、28、35、39、42～49、54:2SC1815(Y)
Q5:2SC387A Q11～15、24、26:3SK74(L) Q18:2SK19(GR) Q29:2SK30A(O) Q36:2SC1345(E) Q38:TA7061AP D1、2:1S2588
D3:1S1212 D4、27～29、34、35、37～40、48～51、54～59、61、62:1S1555 D5、10～17、10～17、30～33:1S1587
D6～9、18、19、21～26、41～46、52、53:1N60 D20:MV-13 D47:1S2208

2SA1015(Y)
2SC1815(Y)

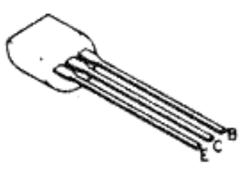

2SC2407
2SC2549

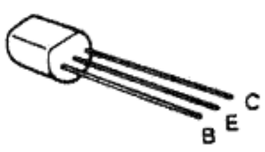

2SA562(Y)
2SC387(A)
2SC735(Y)

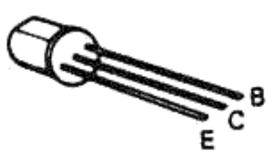

2SC460(B)
2SC1345(E)

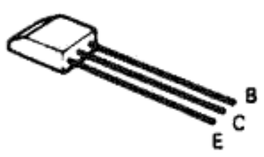

2SC496(Y)

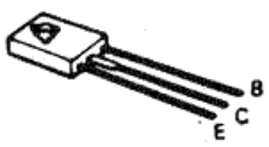

3SK74(L)

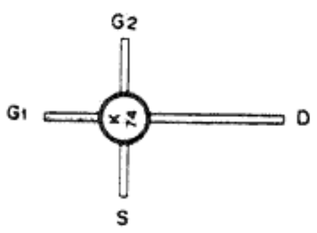

3SK40(L)
3SK76
3SK92

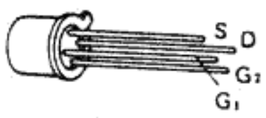

TA7061AP

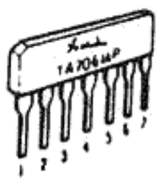

MRF625

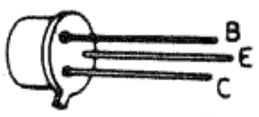

2SC741

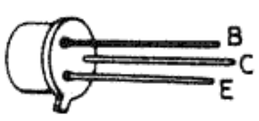

2SK125

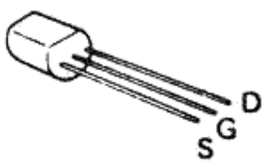

2SK19(GR)

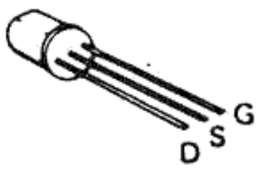

2SD235(Y)

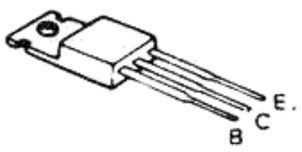

Verwenden

PC BOARD VIEWS

▼ PLL(A) unit (X50-1530-00)

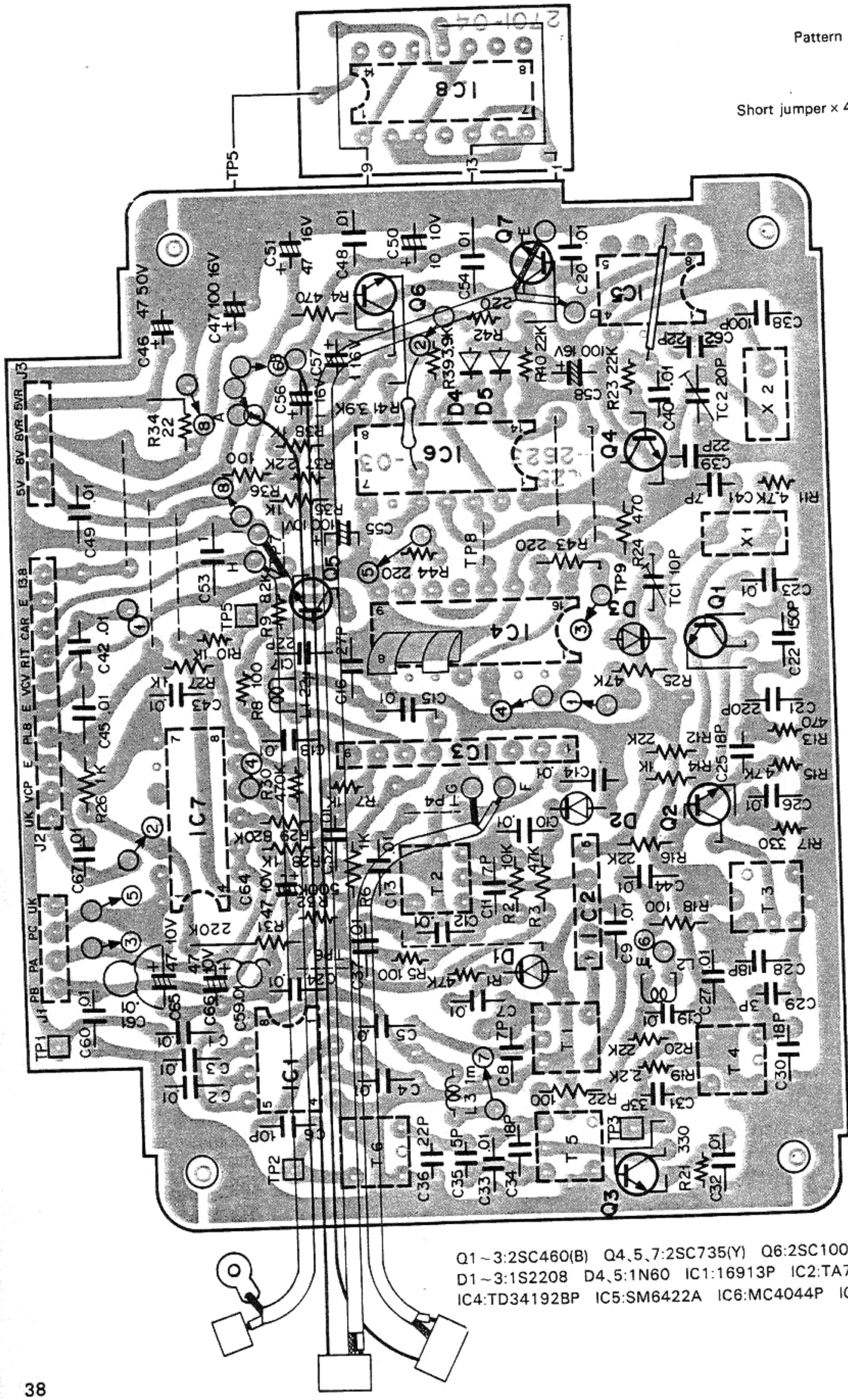

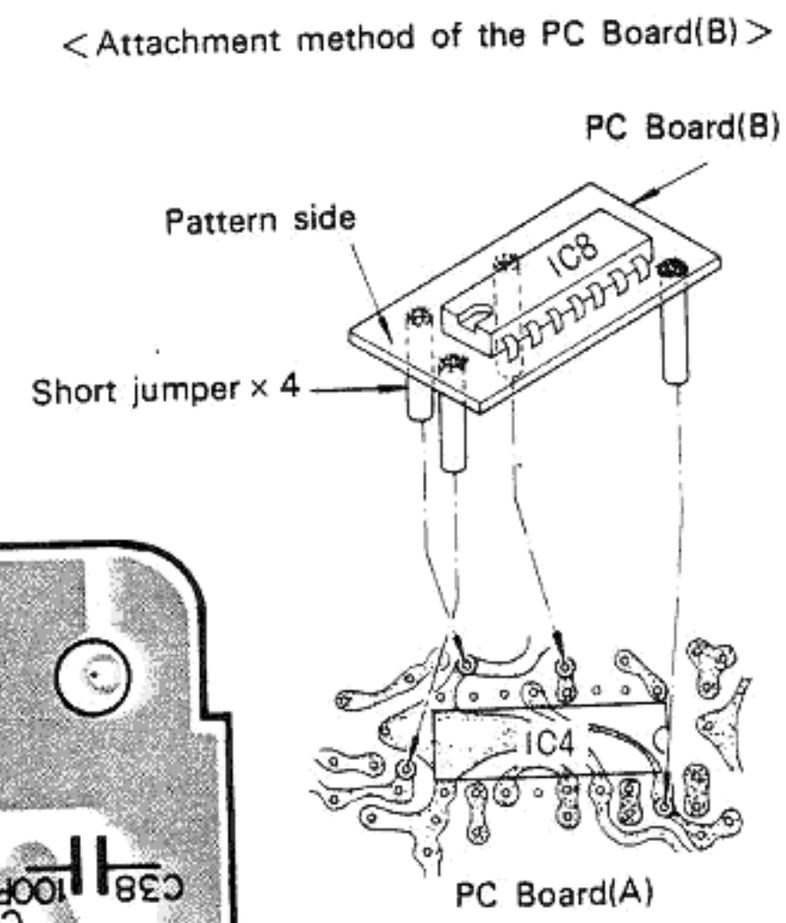

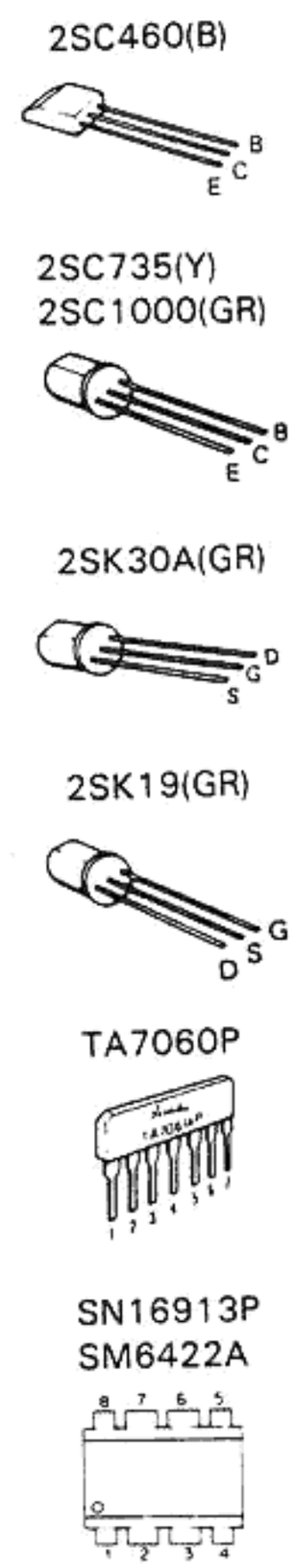

Q1～3:2SC460(B) Q4、5、7:2SC735(Y) Q6:2SC1000(GR)
D1～3:1S2208 D4、5:1N60 IC1:16913P IC2:TA7060P IC3:TA7310P
IC4:TD34192BP IC5:SM6422A IC6:MC4044P IC7:TD3409AP IC8:TD3490BP

PC BOARD VIEWS

▼ PLL(B)unit (X50-1540-00)

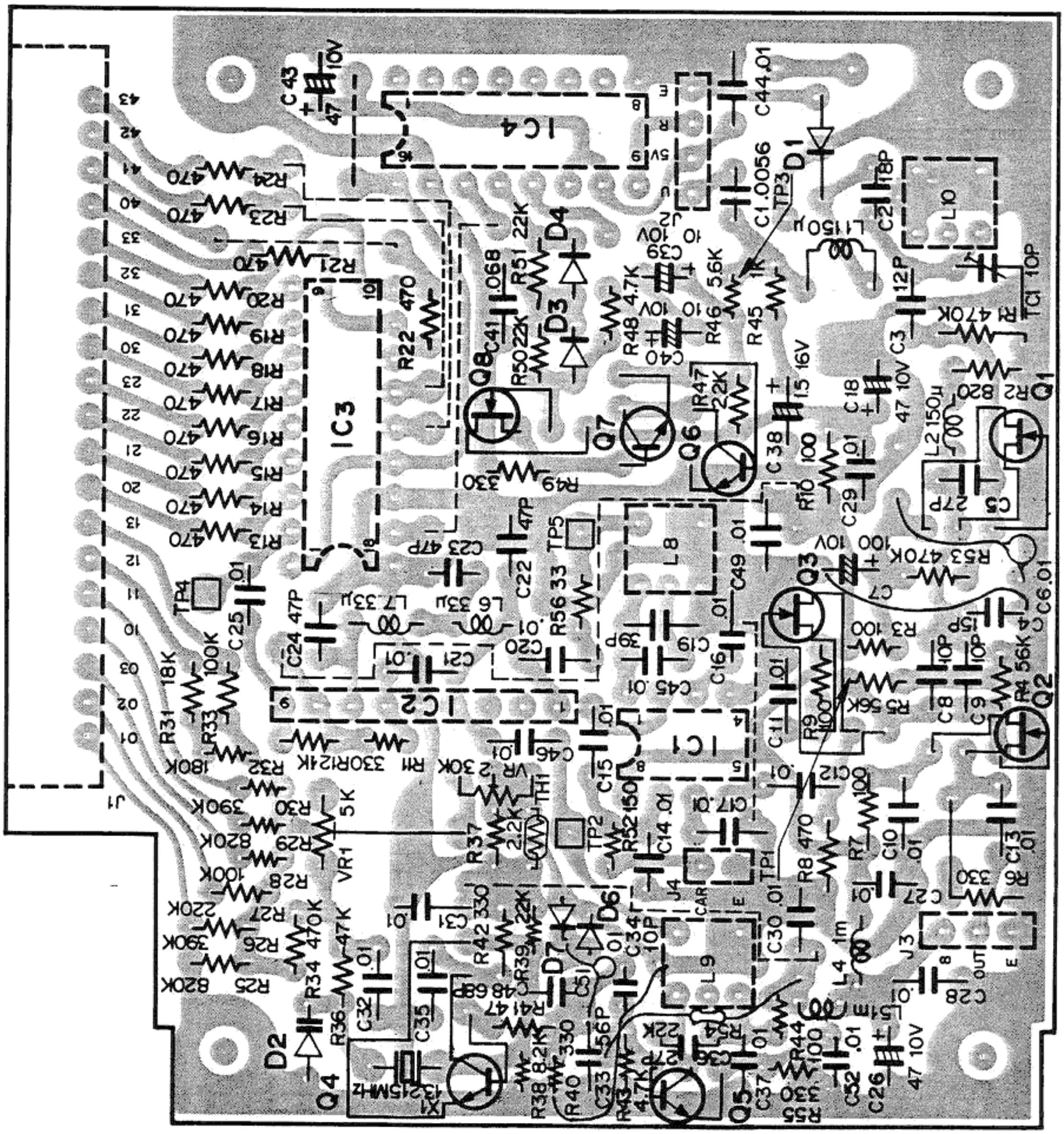

TA7310P

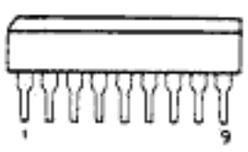

MC4044P
TD3490AP
TD3490BP

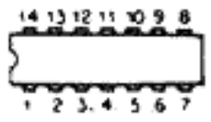

Q1~3:2SK19(GR) Q4、5:2SC460(B) Q6、7:2SC1000(GR) Q8:2SK30A(GR)
D1:1S1658-2 D2:1S2208 D3、4、6、7:1N60
IC1:SN16913P IC2:TA7310P IC3:TC9122P IC4:MC14568B

TD34192BP
MC14568B

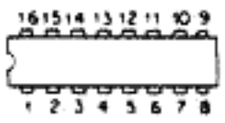

TC9122P

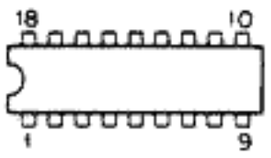

<Attachment method of the J1>

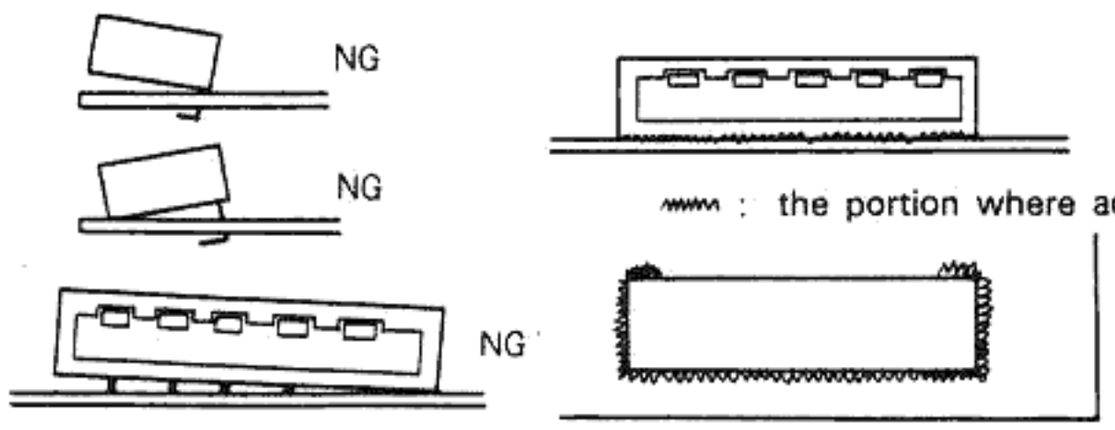

After soldering the J1, apply adhesives around the connector portion and fix it.

PC BOARD VIEWS

▼ 6 key unt (X41-1160-00)

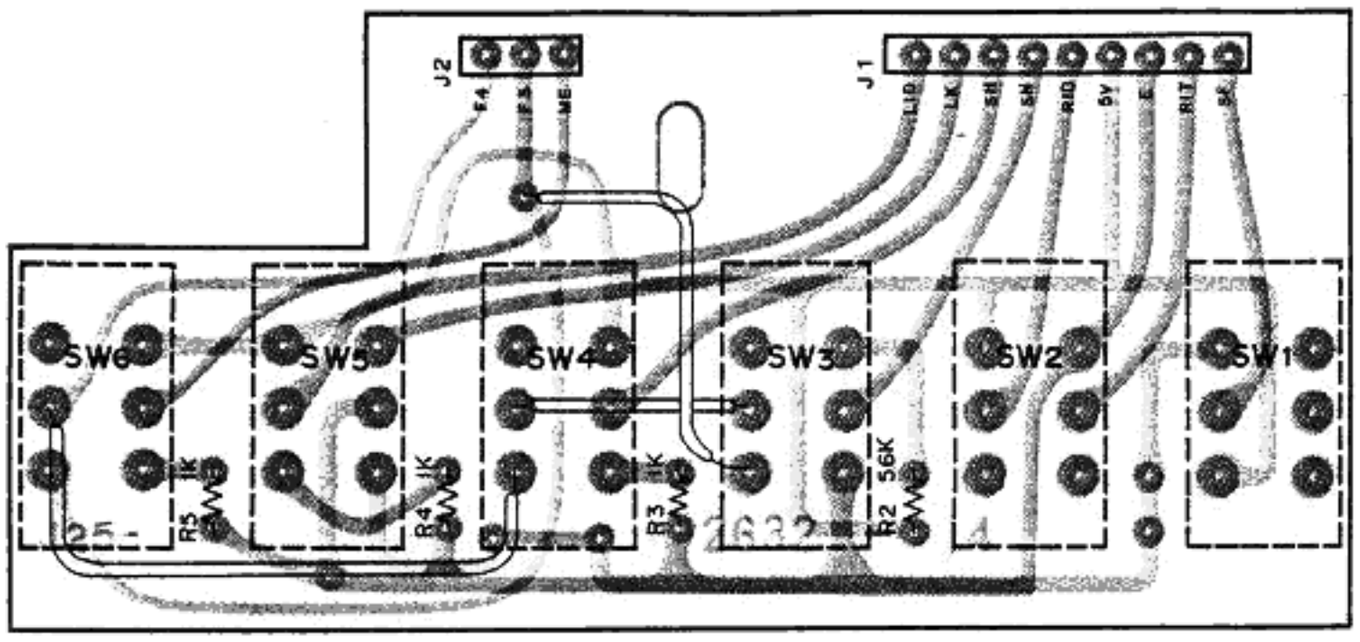

▼ Lever switch unit (X41-1180-00)

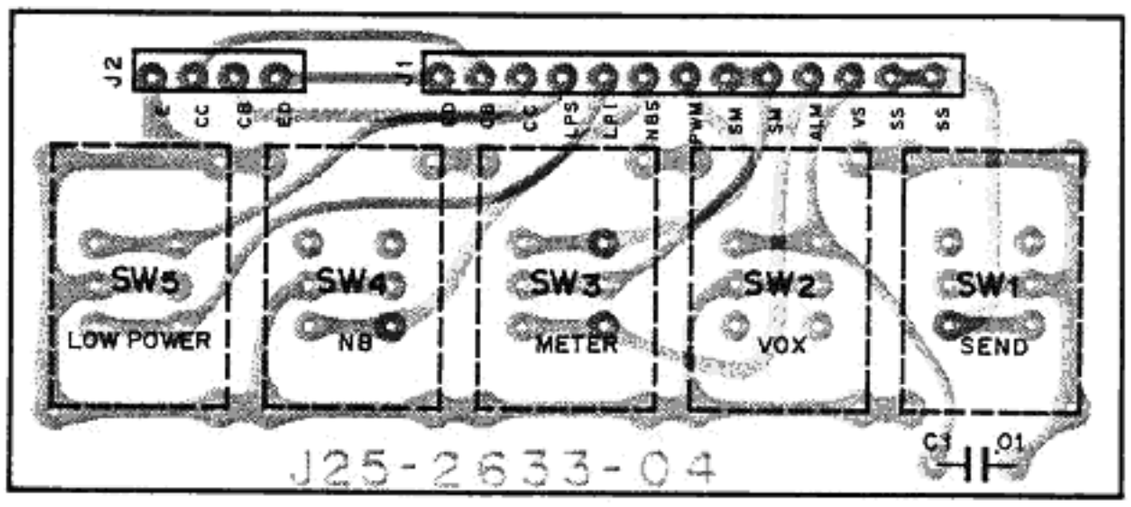

▼ Display unit (X54-1390-00) (View from the parts installed)

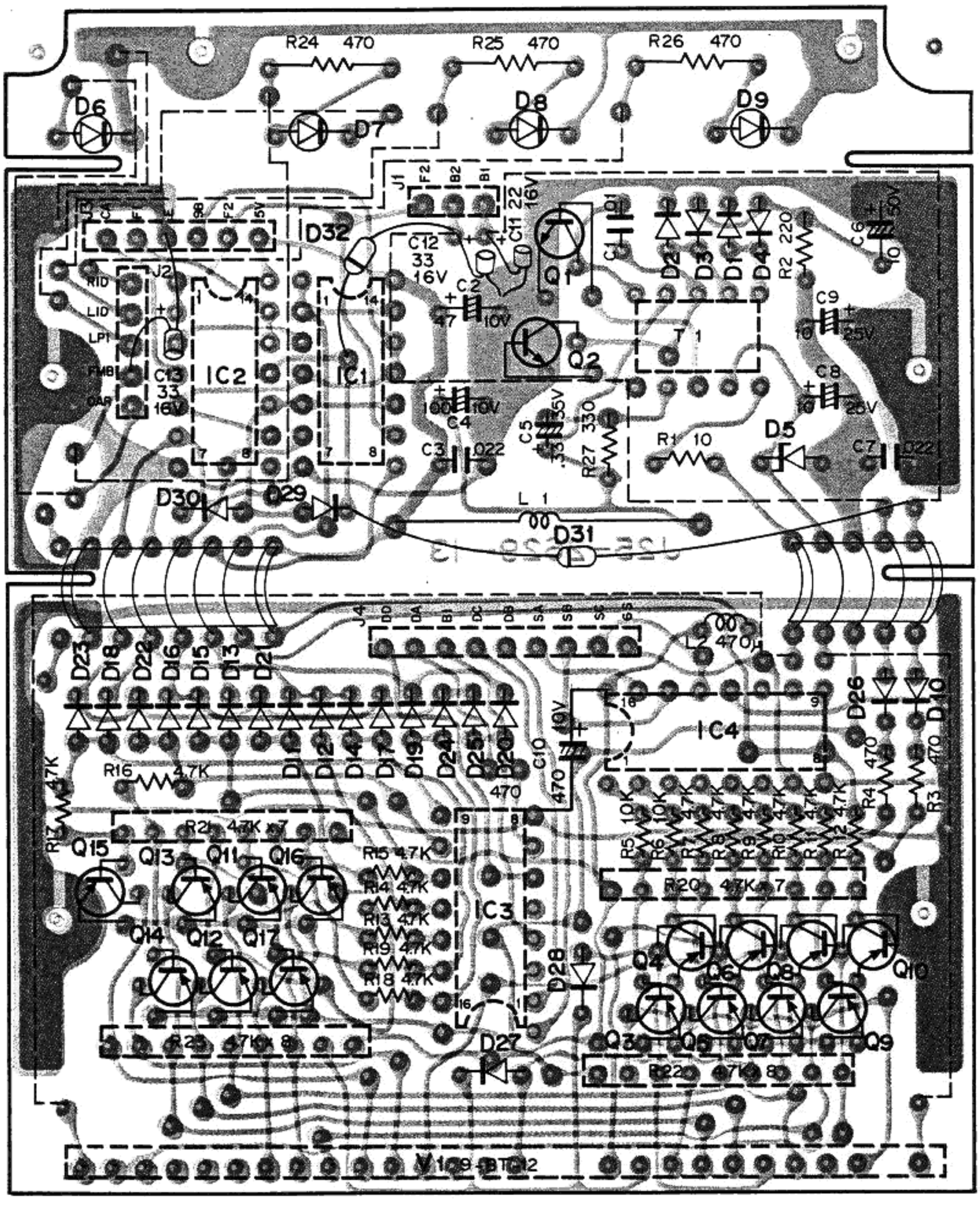

2SA1015(Y)
2SC1815(Y)
2SC1959(Y)

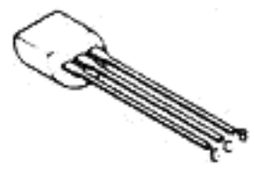

2SC735(Y)

2SC496(Y)

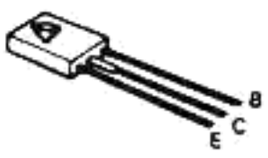

2SC460(B)

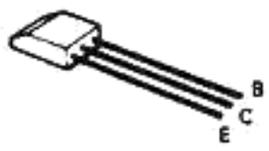

2SA671TD(B)

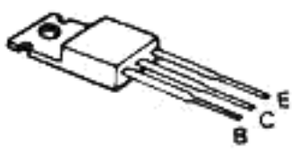

MB3756

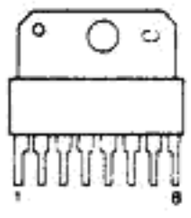

TC4011BP
HD74LS00P
HD74LS10P

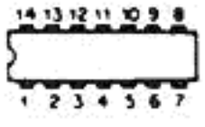

HD74LS42P
SN74LS247N

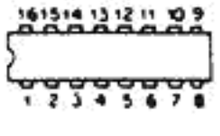

Q1、2:2SC1959(Y) Q3~17:2SC1815(Y) D1~4、10~32:1S1555 D5:WZ-071 D6~9:SEL103W
IC1:HD74LS10P IC2:HD74LS00P IC3:SN74LS247N IC4:HD74LS42P

PC BOARD VIEWS

▼ AVR unit (X43-1310-00)

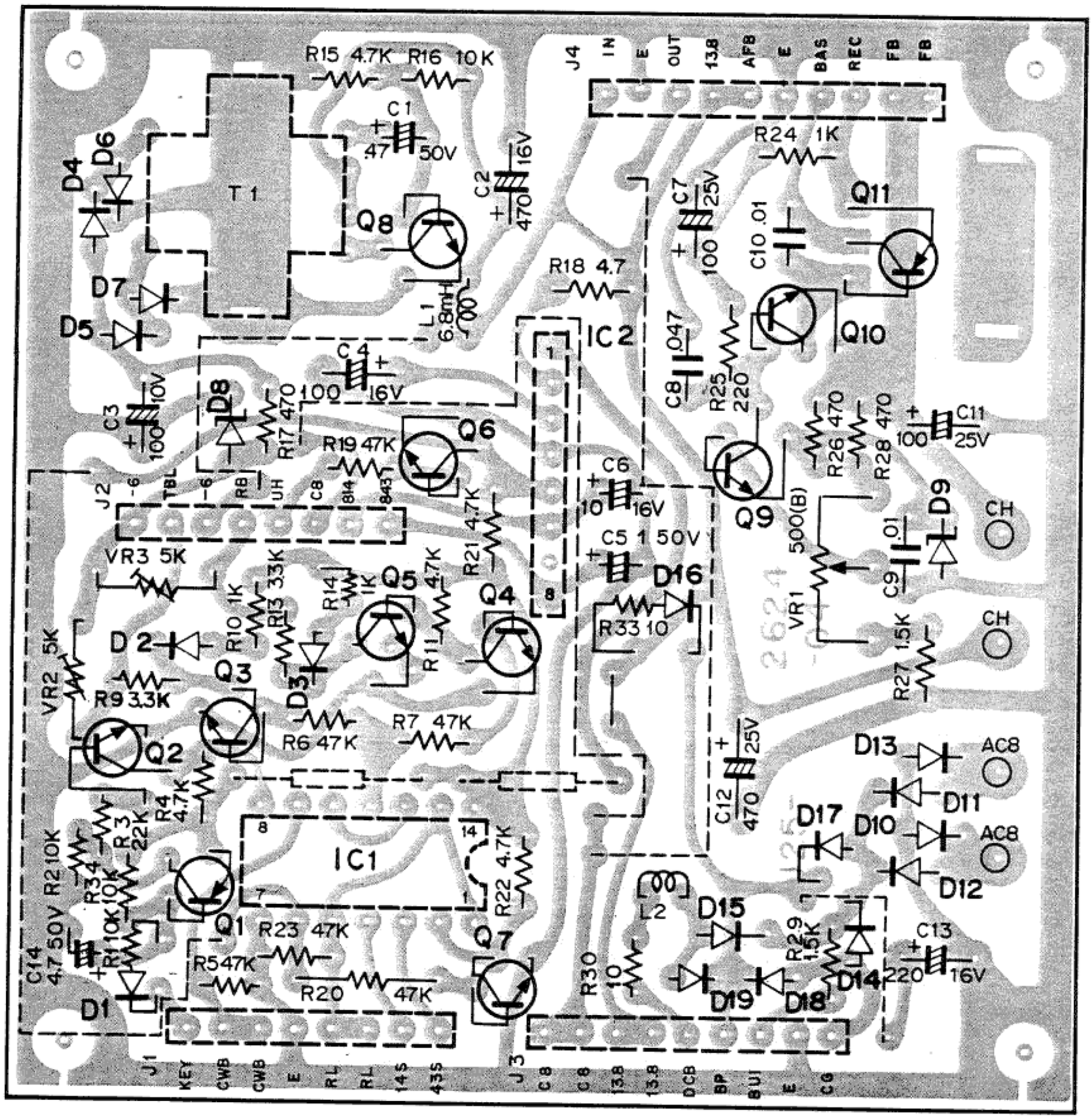

Q1:2SA1015(Y) Q2~7,9:2SC1815(Y) Q10:2SC496(Y) Q11:2SA671TD(B) D1,4~7:1S1555
D2:MV-13 D3:1N60 D8:XZ-060 D9:WZ-090 D10~19:1N4448 IC1:TC4011BP IC2:MB3756M

▼ AF·VR unit (X53-1090-61)

Q1~6:2SC1815(Y) D1:1S1555 IC1:TC4011BP

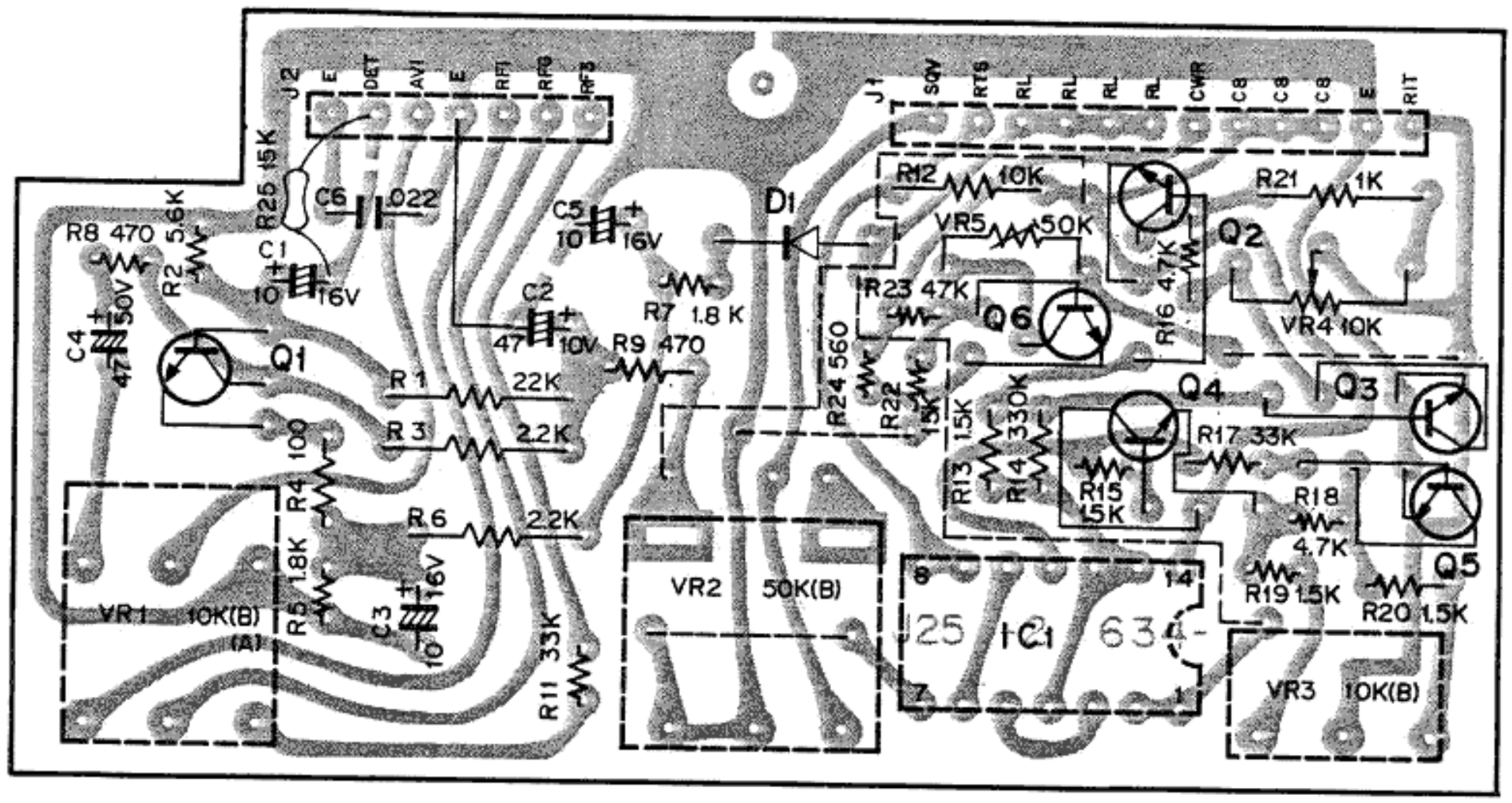

PC BOARD VIEWS

▼ AF·VOX unit (X49-1120-61)

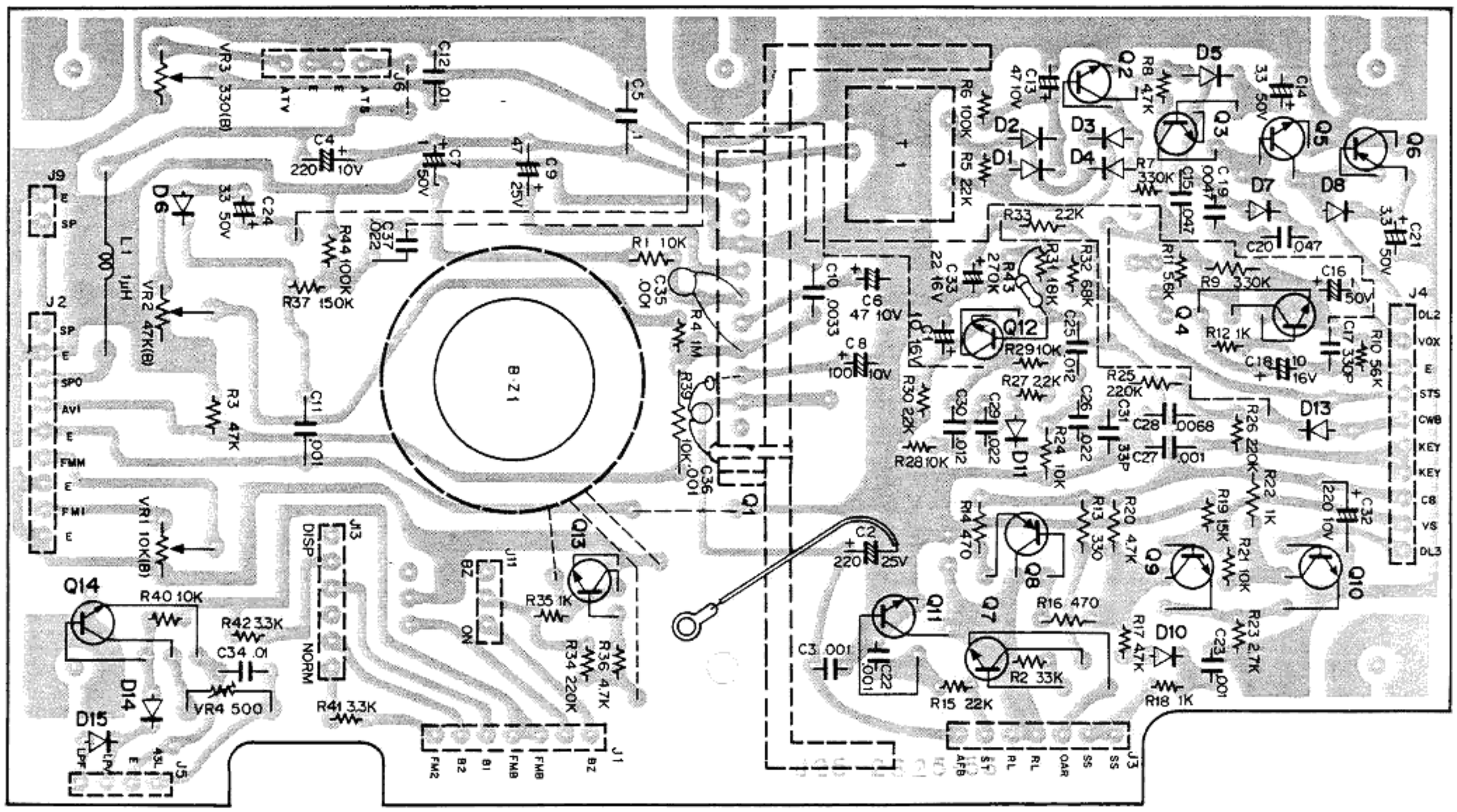

Q1:HA1366W Q2~5,7,9~14:2SC1815(Y) Q6,8:2SA1015(Y) D1~4,7,13:1N60 D5,8,10,11,14,15:1S1555 D6:1S2588

<Attachment method of the C36>

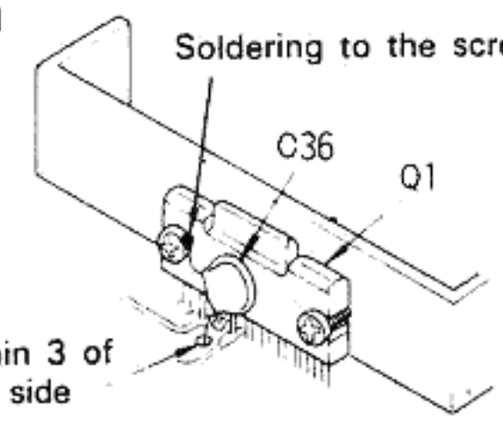

<Attachment method of the buzzer and Q1>

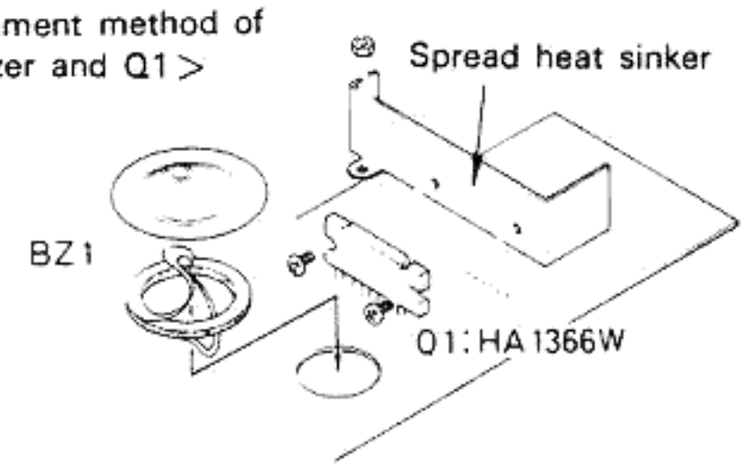

▼ MIC·VR unit (X53-1080-00)

Q1:2SC1000(GR) Q2~7:2SC1815(Y)

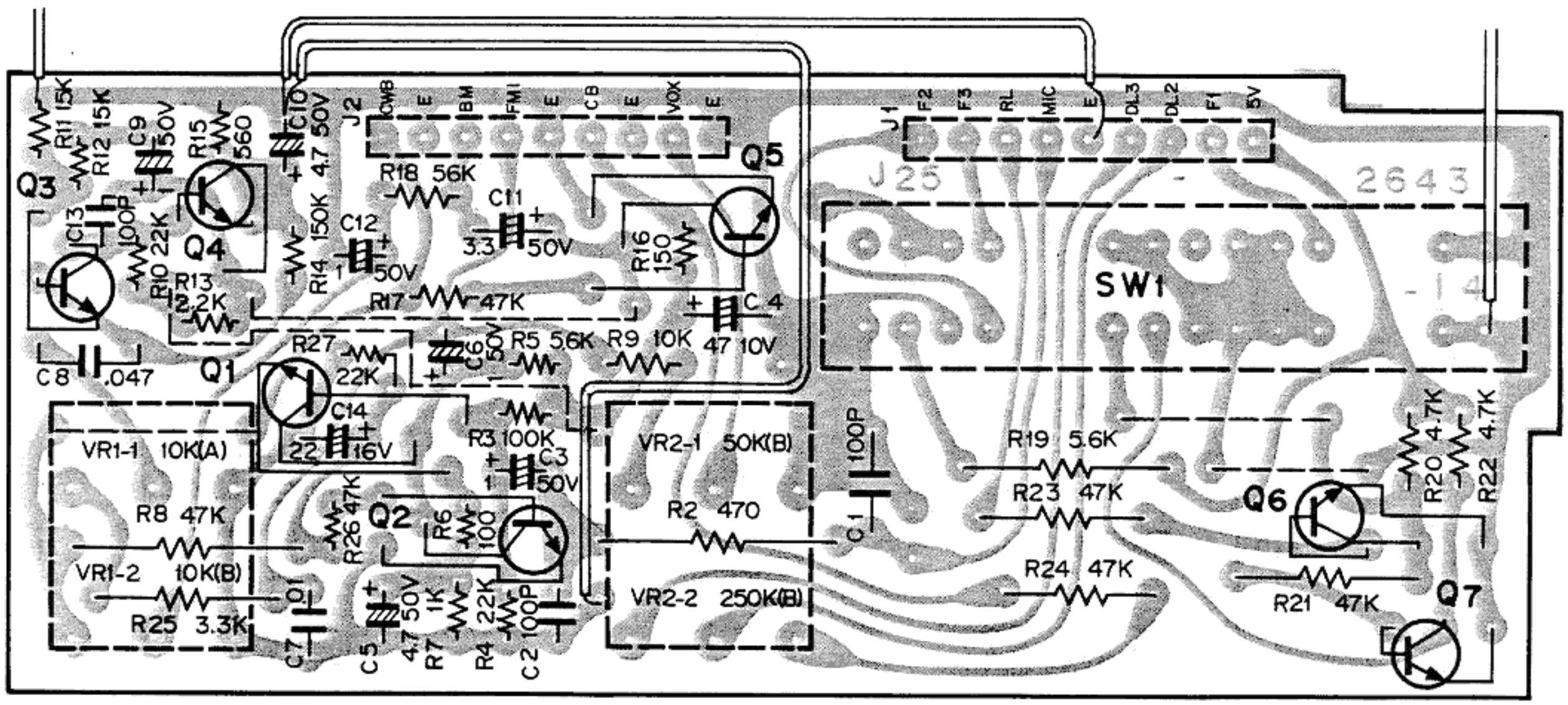

PC BOARD VIEWS

▼ CAR unit (X50-1510-00)

Q1,2: 2SC460(B) D2～6: 1S1555

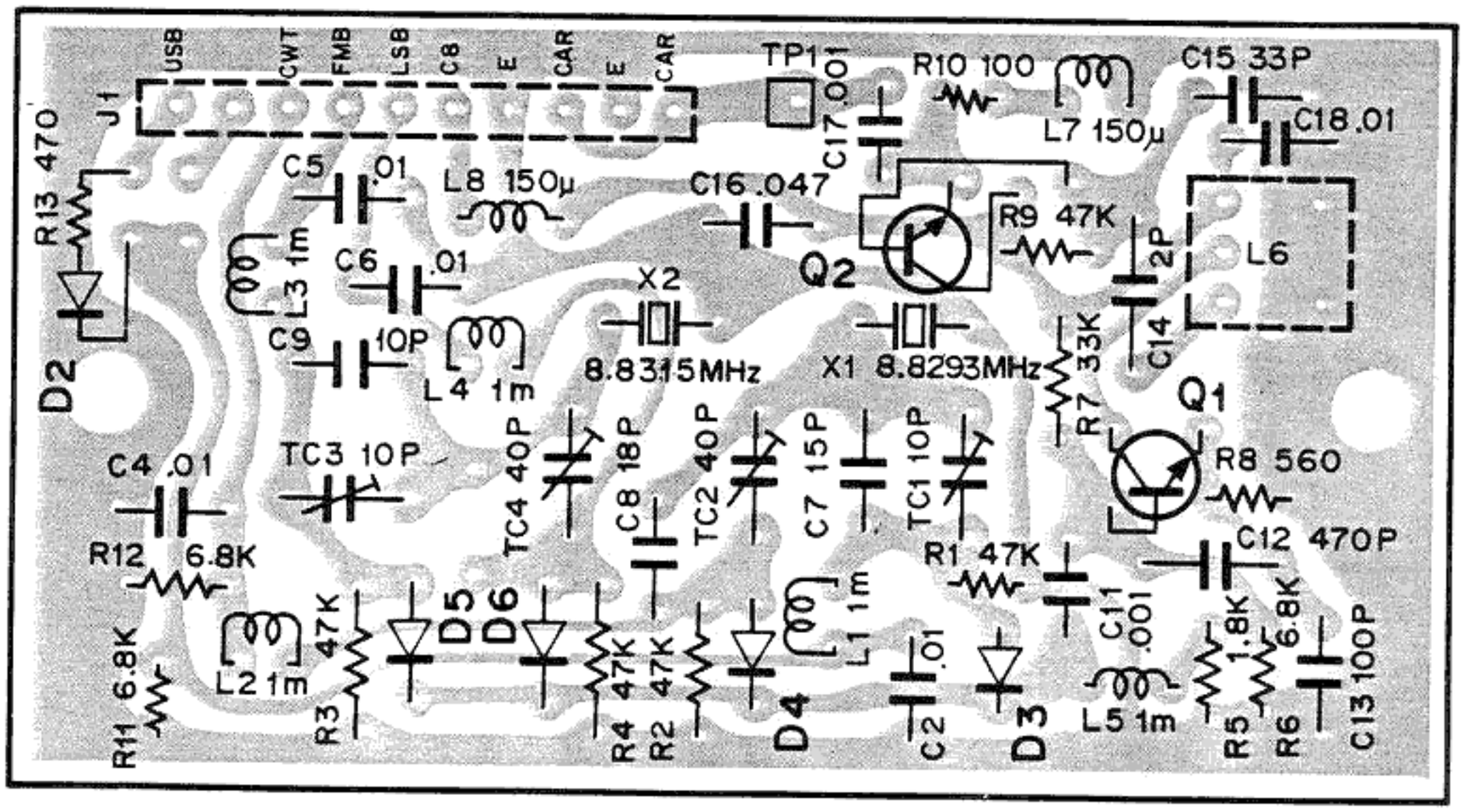

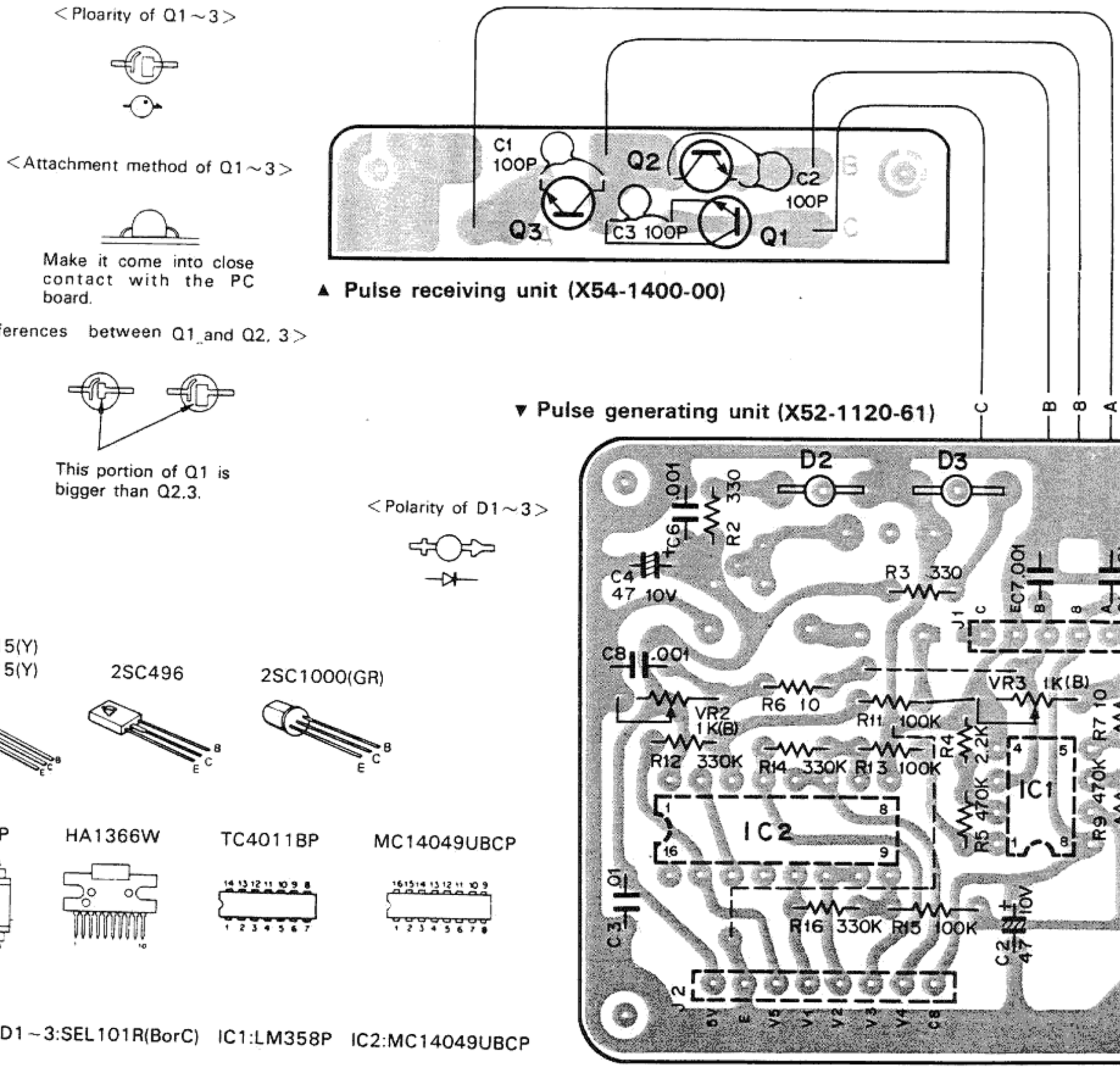

D1～3:SEL101R(BorC) IC1:LM358P IC2:MC14049UBCP

PC BOARD VIEWS

▼ MIX(A) unit (X48-1250-00)

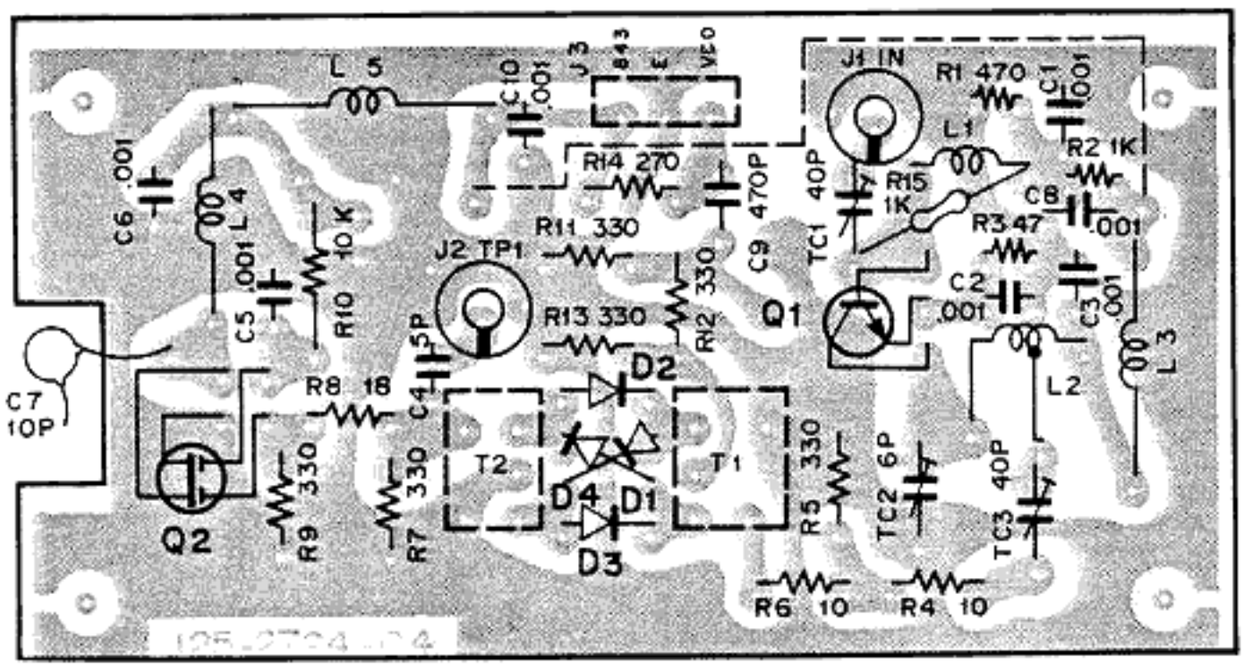

Q1:2SC2407 Q2:3SK76or3SK92 D1~4:1SS97

▼ MIX(B) unit (X48-1260-00)

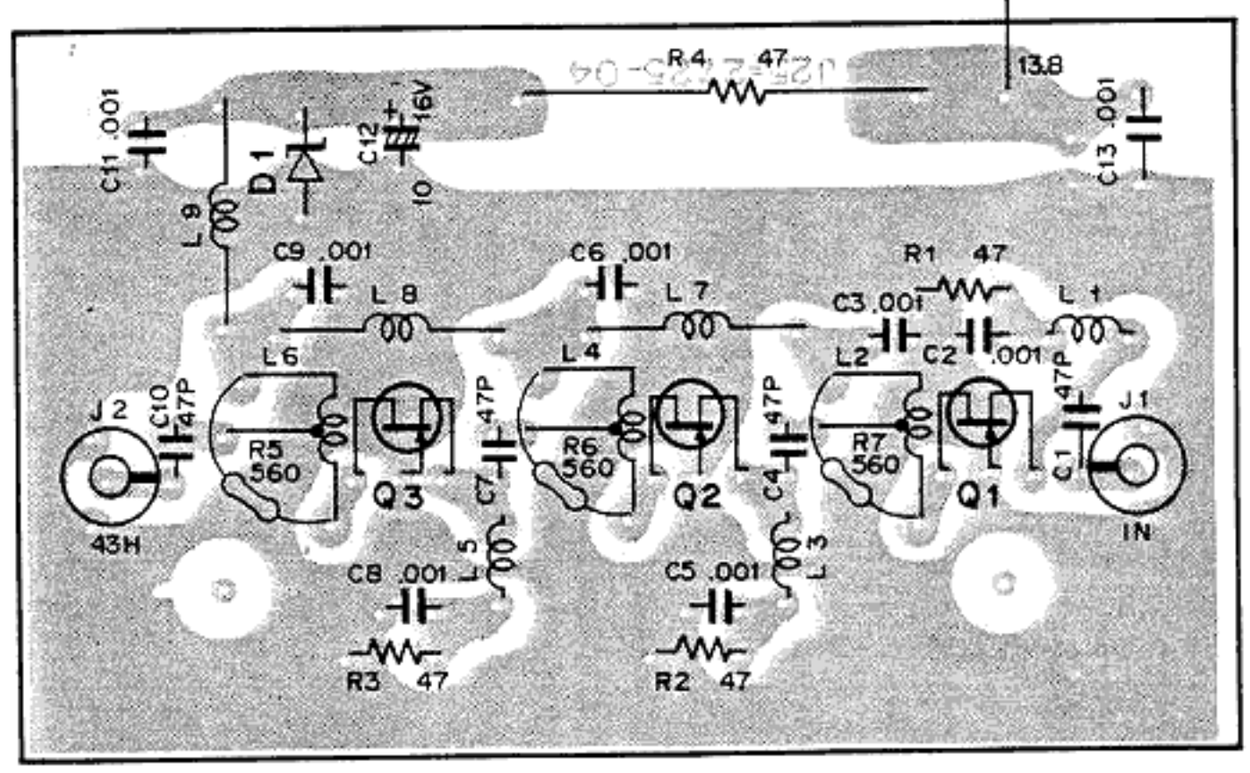

Q1~3:2SK125 D1:BZ-090

<Attachment direction of T1,2>

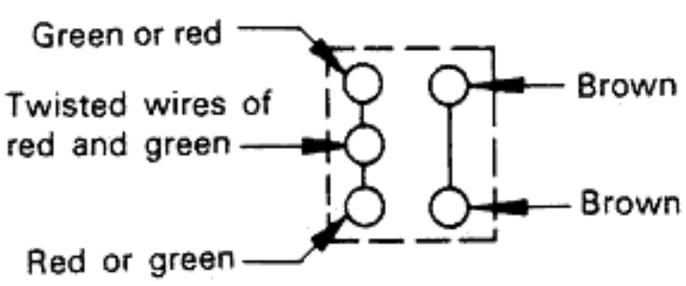

<Attachment direction of D1,4>

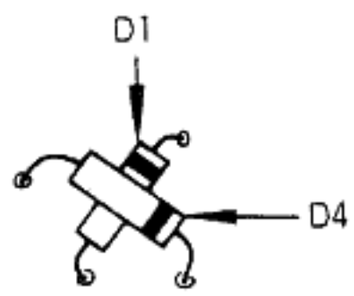

▼ PC Board(A) (J25-2699-14)

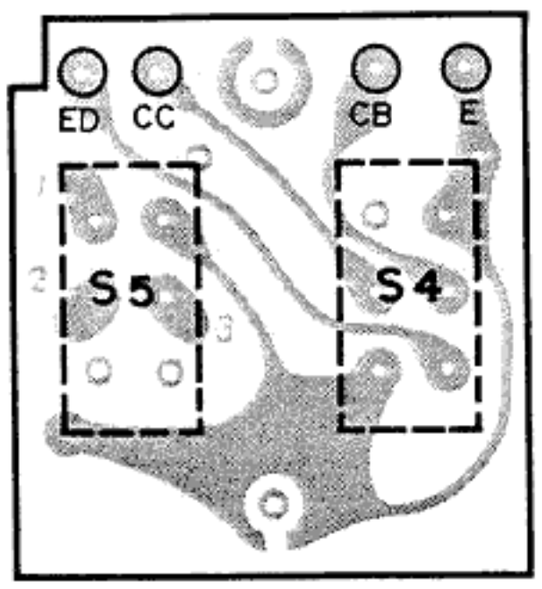

<Attachment direction of the composite resisters.>

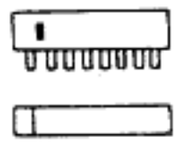

<Attachment method of the J2,3,8>

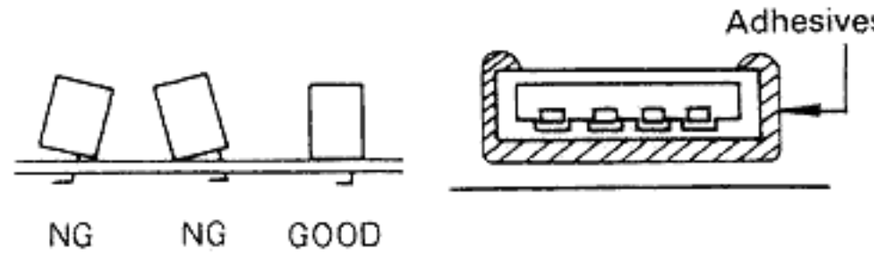

In case of J2, 3, 8, after inserting them into the printed circuit plate, bend the pins at the back side and make them come into close contact with the printed circuit plate.

Furthermore, after dipping, apply sufficient amount of adhesives (Rubber type adhesives such as "Sony Bond" or "Cemedine Hi-Contact") around the connector portion, and fix it in place.

2SA1015(Y)
2SC1815(Y)

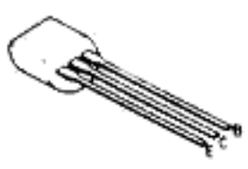

2SK125

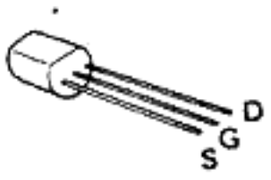

3SK76
3SK92

2SC2407

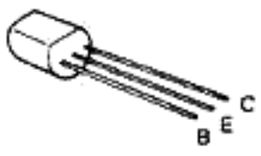

μPC78L05A

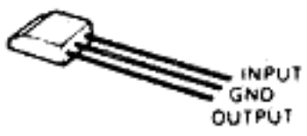

HD74LS00P HD74LS11P
HD74LS03P HD74LS20P
HD74LS04P HD74LS30P
HD74LS08P HD74LS32P
HD74LS10P HD74LS132P
HD7404P

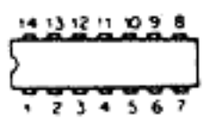

HD74154P

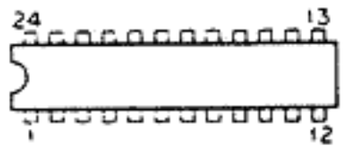

HD74LS75P HD74221P
HD74LS151P MN1201A
HD74LS157P MSM5507RS

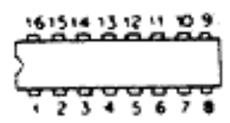

MN9004

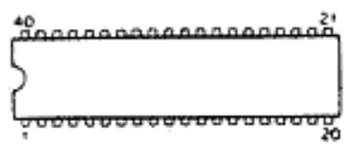

Q1、3~5:2SA1015(Y) Q2、6、7:2SC1815(Y) D1~3、5、7、8、11~15、17~24:1S1555 D4、6、25、26:1N60 IC1、2:HD74LS03P IC3、6、9、11、36:HD74LS00P IC4、19:HD74LS08P IC5:HD74LS10P IC7、12:HD74LS04P IC8:HD74LS132P IC10:HD74LS32P IC14:HD74LS02P IC15、16、21:HD74LS20P IC17:HD7404P IC18:MSM5507RS IC20:HD74LS11P IC22~24:HD74LS30P IC25:HD74154P IC26~29:HD74LS151P IC30、31:HD74LS75P IC32、33:MN1201A IC34、35:HD74LS157P IC37:HD74221P IC38:MN9004 IC39:μPC78L05A

PC BOARD VIEWS

▼ **Digital Unit (X54-1460-61) (View from the parts installed)**

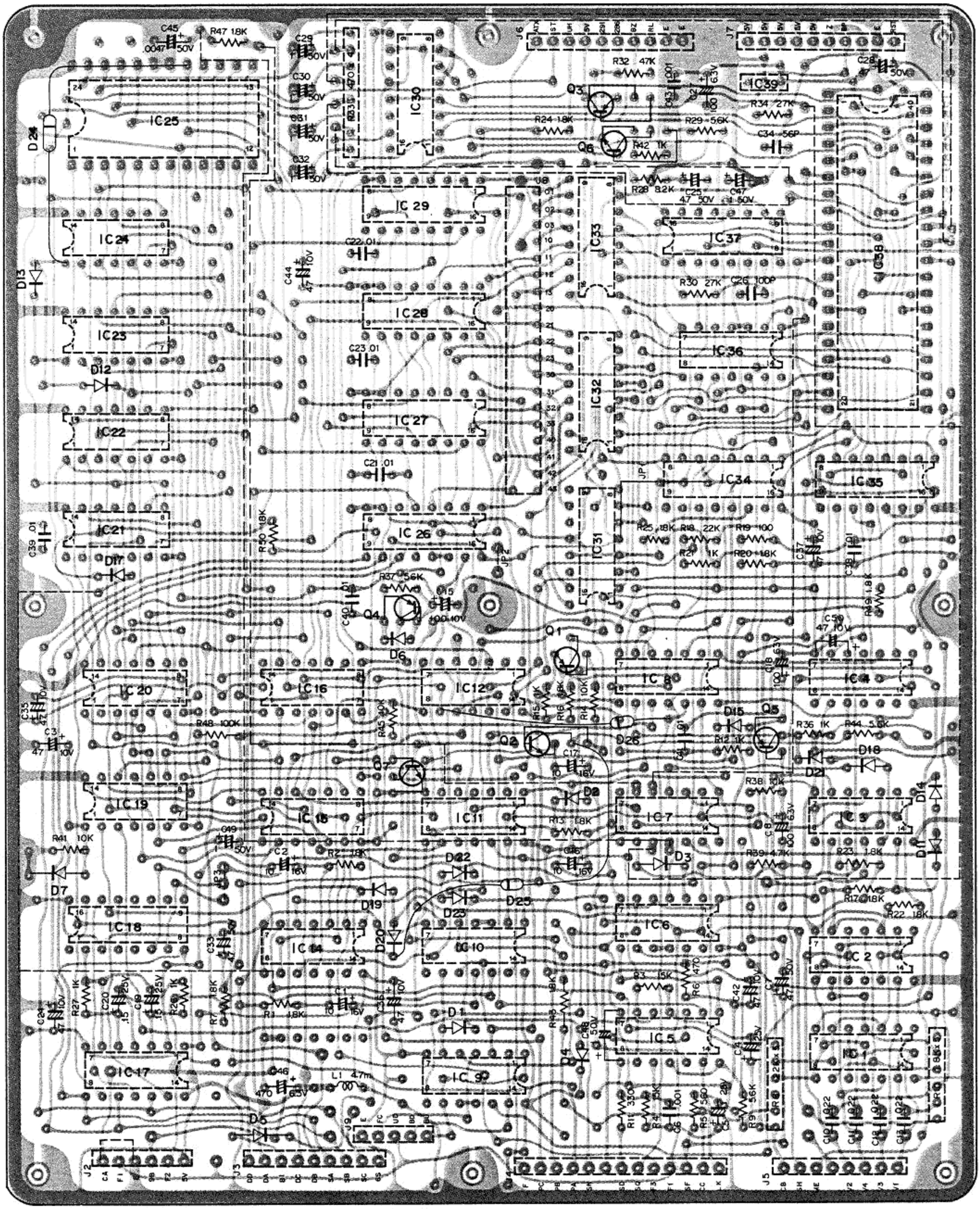

PC BOARD VIEWS

▼ 144 Final Unit (X56-1310-01)

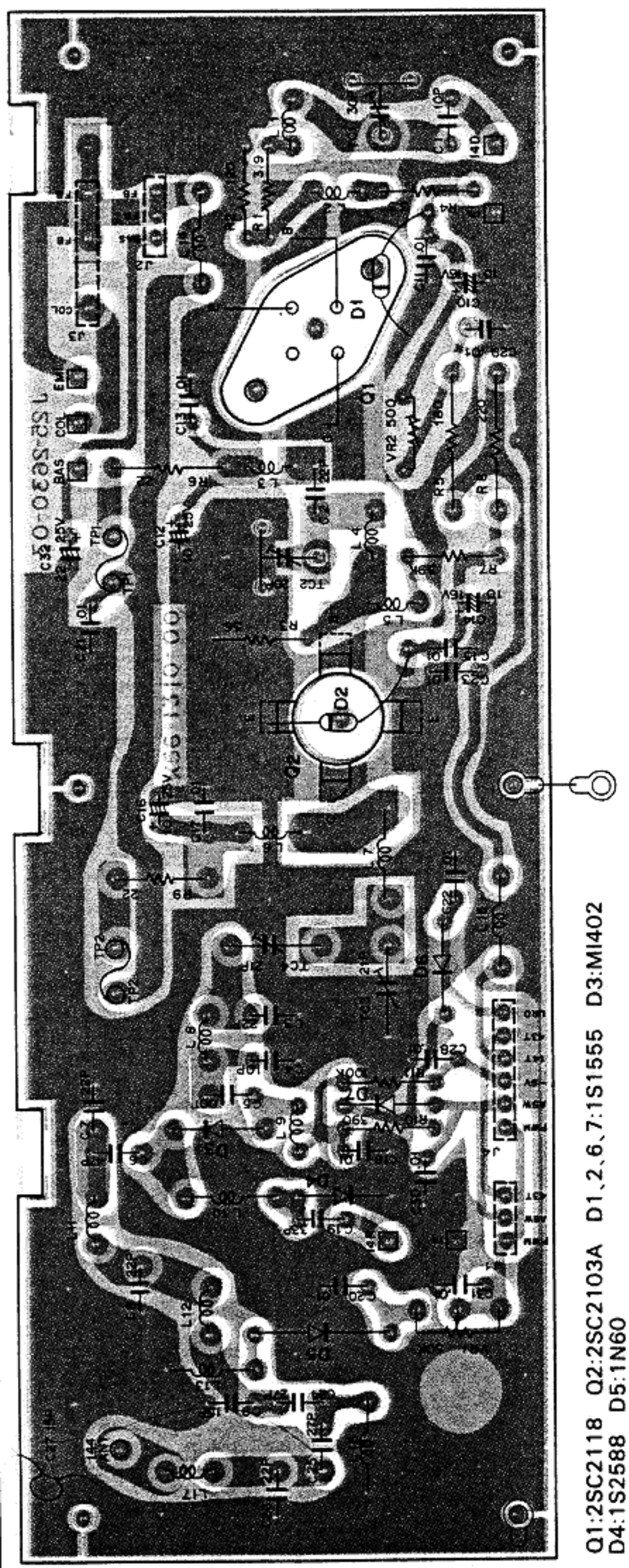

Q1:2SC2118 Q2:2SC2103A D1、2、6、7:1S1555 D3:MI402
D4:1S2588 D5:1N60

2SD235(Y)

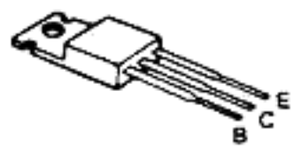

2SC2118

2SC2103A
2SC2380
2SC2381
2SC2391

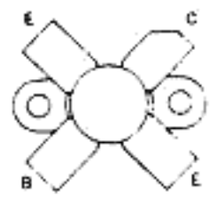

▼ 430 Final Unit (X56-1320-01)

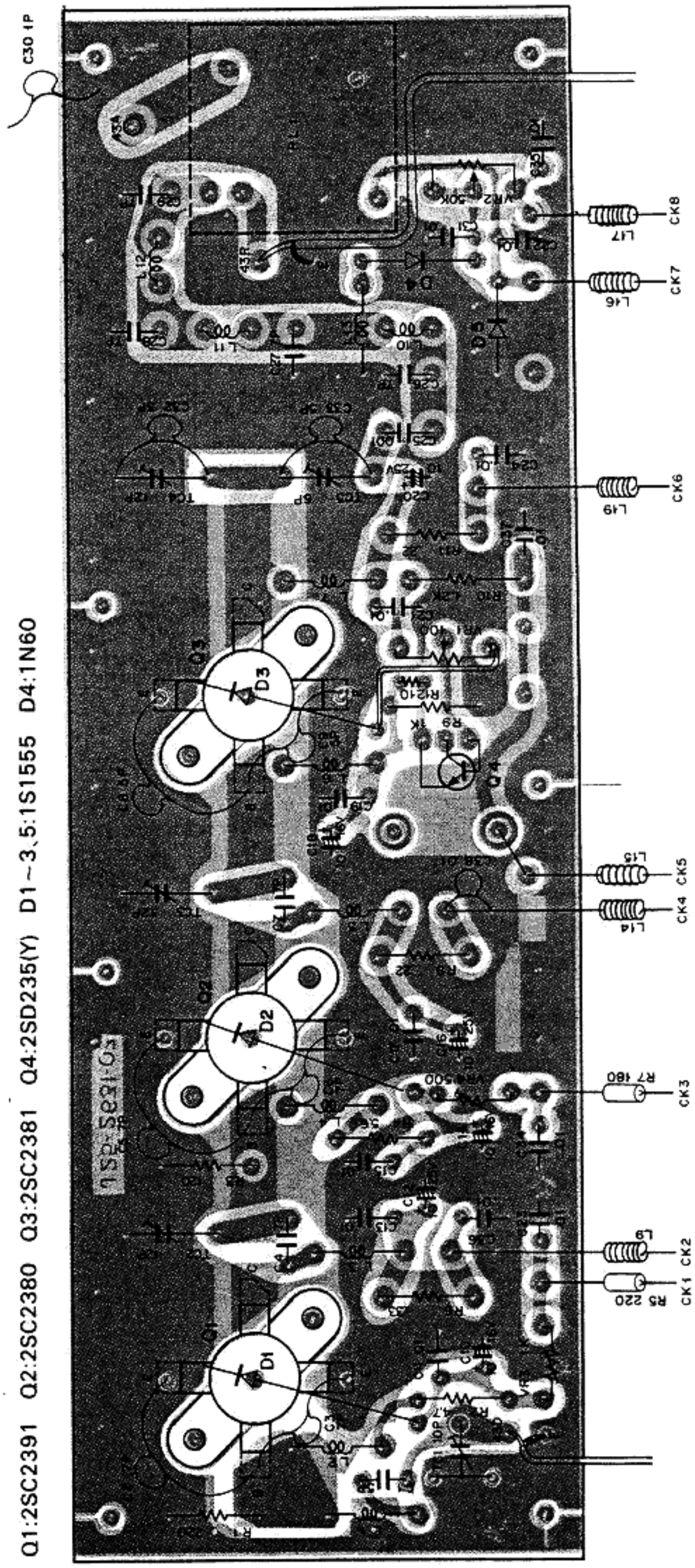

Q1:2SC2391 Q2:2SC2380 Q3:2SC2381 Q4:2SD235(Y) D1~3、5:1S1555 D4:1N60

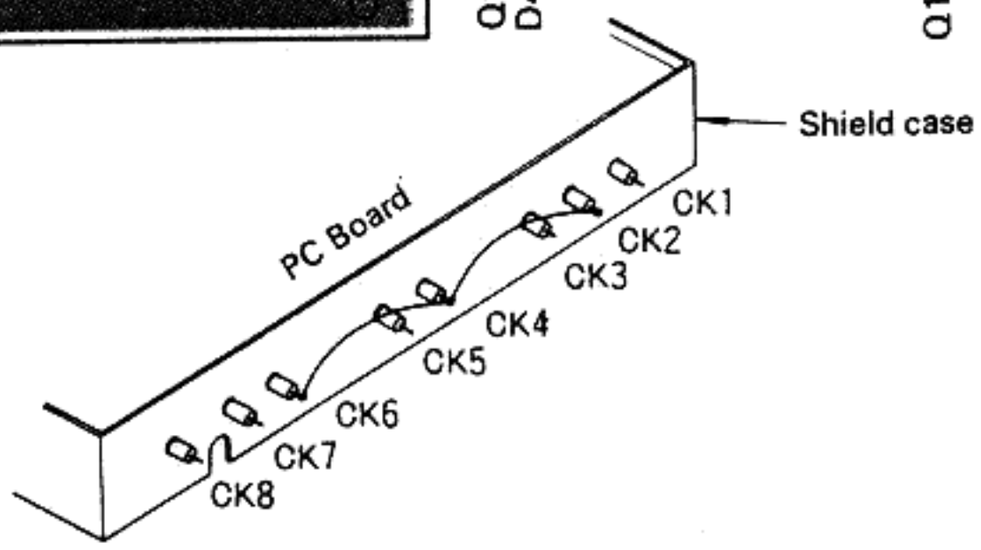

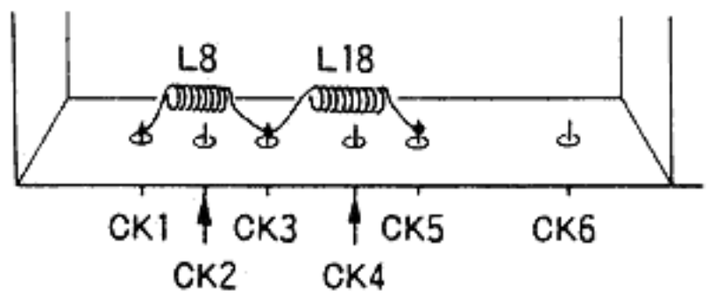

PC BOARD VIEWS

▼ IF Unit (X48-1220-00) ONLY S/N 94○○○○

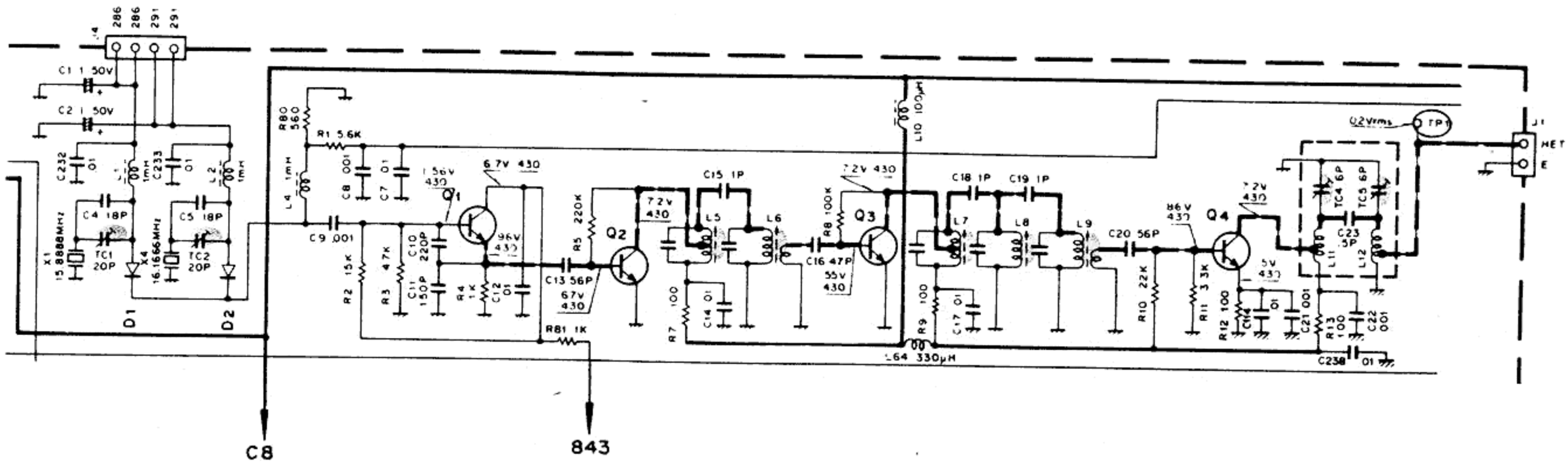

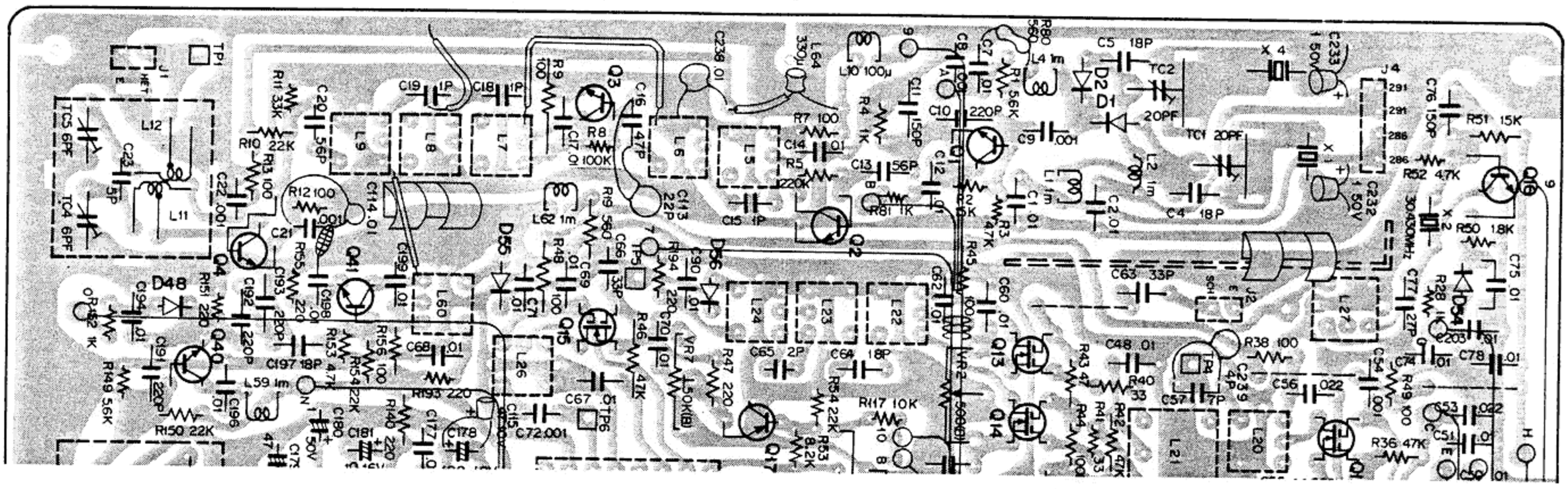

Ref. No.	Parts No.	Description	Re-marks
C1,2	CK45F1H103Z	Ceramic 0.01μF +80%−20%	
C4,5	CC45CH1H180J	Ceramic 18pF ±5%	
C7	CK45F1H103Z	Ceramic 0.01μF +80%−20%	
C10	CM93BD2A221J	Mica 220pF ±5%	
C11	CC45SL1H151J	Ceramic 150pF ±5%	
C12	CK45F1H103Z	Ceramic 0.01μF +80%−20%	
C13	CC45CH1H560J	Ceramic 56pF ±5%	
C14	CK45F1H103Z	Ceramic 0.01μF +80%−20%	
C15	CC45CH1H010C	Ceramic 1pF ±0.25pF	
C16	CC45CH1H470J	Ceramic 47pF ±5%	
C17	CK45F1H103Z	Ceramic 0.01μF +80%−20%	
C18,19	CC45CH1H010C	Ceramic 1pF ±0.25pF	
C20	CC45CH1H560J	Ceramic 56pF ±5%	
C21,22	CK45D1H102M	Ceramic 0.001μF ±20%	
C232,233	CE04W1H010	Electrolytic 1μF 50WV	
C114	CK45F1H103Z	Ceramic 0.01μF +80%−20%	
C238	CK45F1H103Z	Ceramic 0.01μF +80%−20%	
	Not used C148,149, 164,169,172,173		
D1,2	V11-0414-05	Diode 1S2588	
D36,60		Not used	

Ref. No.	Parts No.	Description	Re-marks
L1,2	L40-1021-25	Ferri-inductor 1 mH	
L4	L40-1021-03	Ferri-inductor 1 mH	
L5,6	L34-0752-05	Tuning coil	
L7～9	L34-0753-05	Tuning coil	
L10	L40-1011-03	Ferri-inductor 100μH	
L11,12	L34-0756-05	Tuning coil	
	Not used L25,39, 45,49,52,55		
Q1～3	V03-0079-05	Transistor 2SC460B	
Q4	V03-0287-05	Transistor 2SC387A	
	Not used Q25,37		
	Not used R6,14, 165,200,210		
TC1,2	C05-0306-05	Ceramic Trimmer 20pF	
TC4,5	C05-0062-05	Ceramic Trimmer 6pF	
J1	E40-0273-05	Mini connect wafer, 2P	
J4	E40-0473-05	Mini connect wafer, 4P	
X1	L77-0843-05	Crystal 15.888 MHz	
X4	L77-0842-05	Crystal 16.1666 MHz	

PC BOARD VIEWS

▼ MIX Unit (X48-1230-00) ONLY S/N 94○○○○

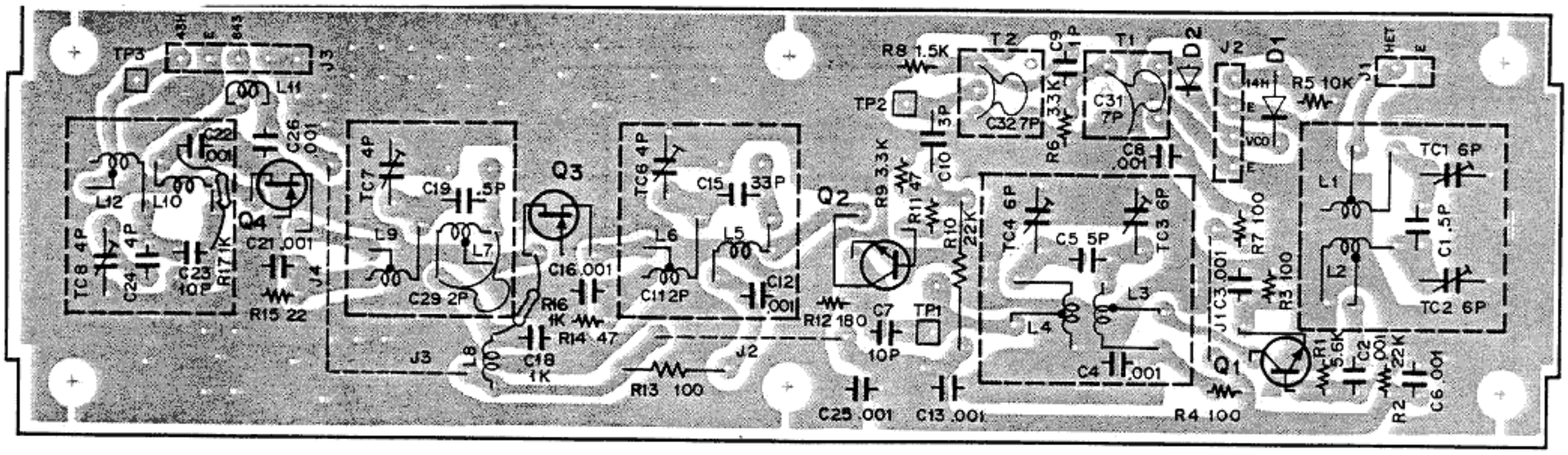

Q1,2 : 2SC387A , Q3,4 : 2SK125, D1,2 : 1S2588

Note: Insert Q2,3,4 as far as they will go, and make the pins short.

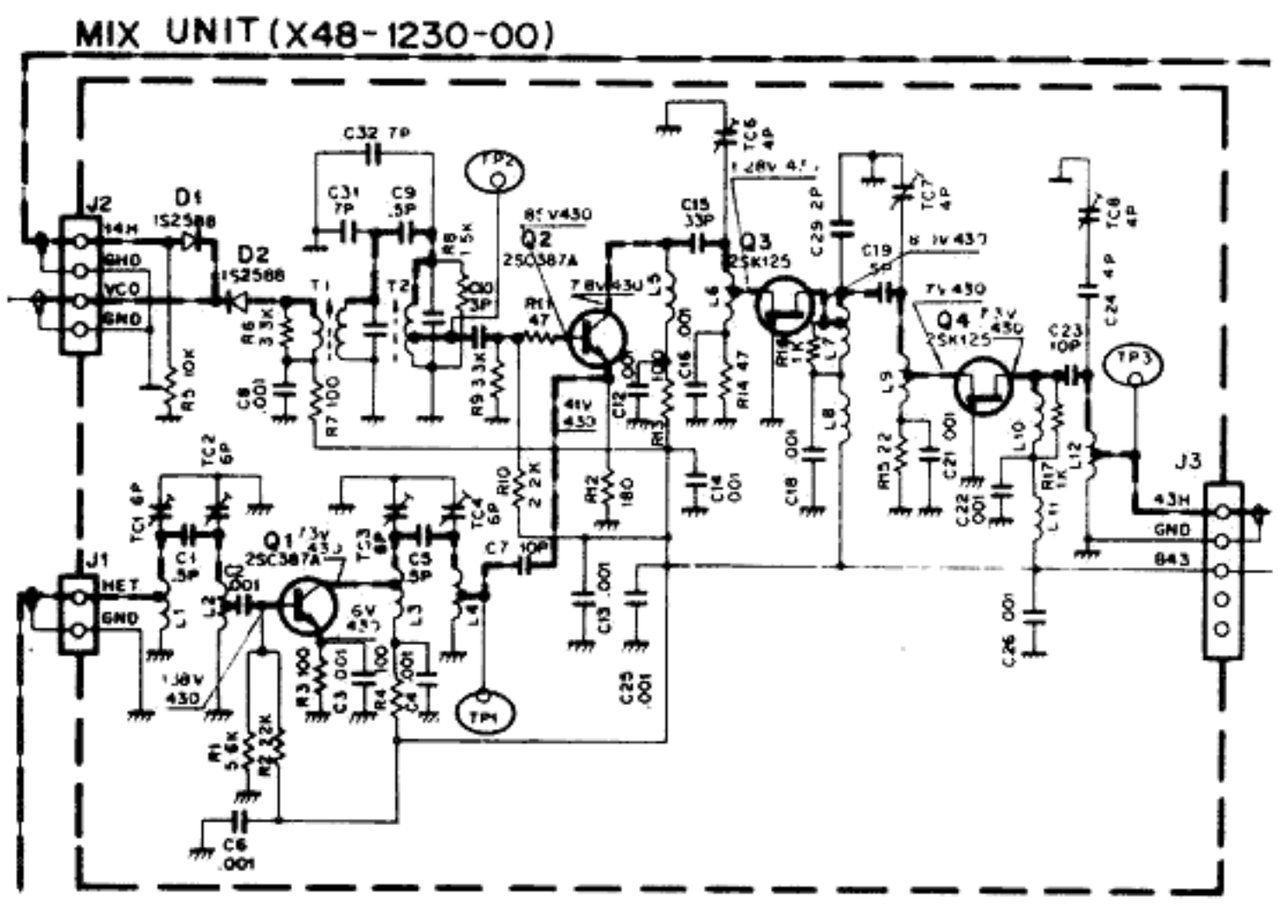

2SC1815(Y)

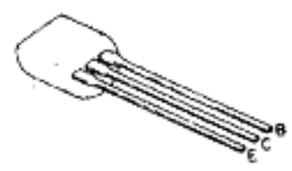

2SC387A
2SC1000(GR)

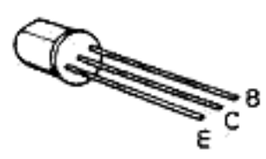

2SK125

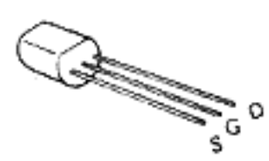

Ref. No.	Parts No.	Description			Re-marks
C1,5	CC45CH1H0R5C	Ceramic	0.5pF	±0.25pF	
C7	CC45CH1H100D	Ceramic	10pF	±0.5pF	
C9	CC45CH1H0R5C	Ceramic	0.5pF	±0.25pF	
C10	CC45CH1H030C	Ceramic	3pF	±0.25pF	
C15	CC45CH1H330J	Ceramic	33pF	±5%	
C19	CC45CH1H0R5C	Ceramic	0.5pF	±0.25pF	
C23	CC45CH1H100D	Ceramic	10pF	±0.5pF	
C24	CC45CH1H040C	Ceramic	4pF	±0.25pF	
C29	CC45CH1H020C	Ceramic	2pF	±0.25pF	
C31,32	CC45SL1H070C	Ceramic	7pF	±0.25pF	
	Not used C11,14, 17,20,27,28,30				
D1,2	V11-0414-05	Diode	1S2588		
L1	L34-0751-05	Coil			☆
L2	L34-0756-05	Coil			☆
L3,4	L34-0751-05	Coil			☆

Ref. No.	Parts No.	Description	Re-marks
L5	L33-0605-05	Choke coil	
L6,7	L34-0824-05	Coil	☆
L8	L33-0002-05	Choke coil 1μH	
L9	L34-0824-05	Coil	☆
L10	L33-0605-05	Choke coil	
L11	L33-0002-05	Choke coil	
L12	L34-0825-05	Coil	☆
Q1,2	V03-0287-05	Transistor 2SC387A	
Q3,4	V09-1004-26	FET 2SK125	
T1,2	L34-0748-05	Tuning coil	
TC1～4	C05-0062-05	Ceramic Trimmer, 6P	
TC5		Not used	
TC6～8	C05-0308-05	Ceramic Trimmer, 4P	

DISASSEMBLY

1. How to remove the cases

A. How to remove the top case

1) Remove the four screws above the top case, and remove the six screws on both sides.
2) Lift up the upper case located towards the back side of the set. At this time, since the speaker cord is in a connected state, pay special attention to the speaker cord when the case is lifted.
3) Remove the protective sheet attached to the volume knob on top of the AF/VOX unit.
4) Remove the speaker cord from the connector of the AF/VOX unit.

B. How to remove the lower case

1) Remove the upper case in accordance with the procedure outlined in A.
2) Remove the 4 screws located on both sides and the 4 screws located at the bottom.
3) Lift up the case and make the removal.

C. Precautions for mounting the upper case

1) Firmly insert the speaker cord into the designated terminal of the AF/VOX unit.
2) Attach the upper case while paying attention to the 3 volume knobs located at the top of the set.

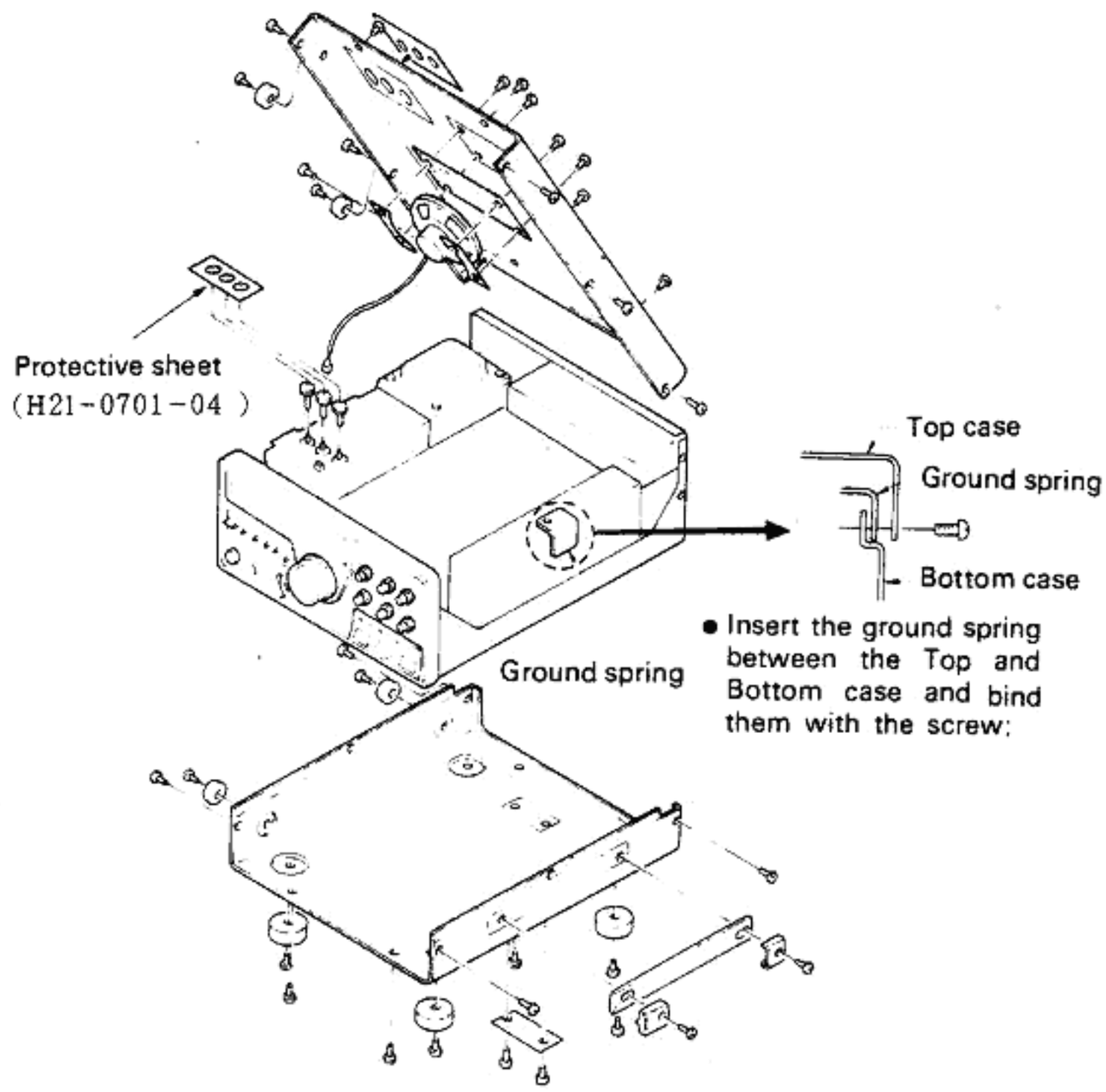

Fig. 1

2. How to incline the front panel

1) Remove the top and bottom cases.
2) Remove the screws of the RF Unit side, and remove the earth wire located between the RF Unit and the MIC VR Unit.
3) Remove the 4 screws located on both sides, then incline the front panel forward (In case the front panel is erected and the screws are tightened, pay special attention so that the wires will not be pinched in between.)
4) Pull out the IN of MIX (B) Unit and the connector of 43 H.
5) Remove the flat cable located between the display unit and the digital unit from the digital unit side.

http://www.qsl.net/pe3hmp

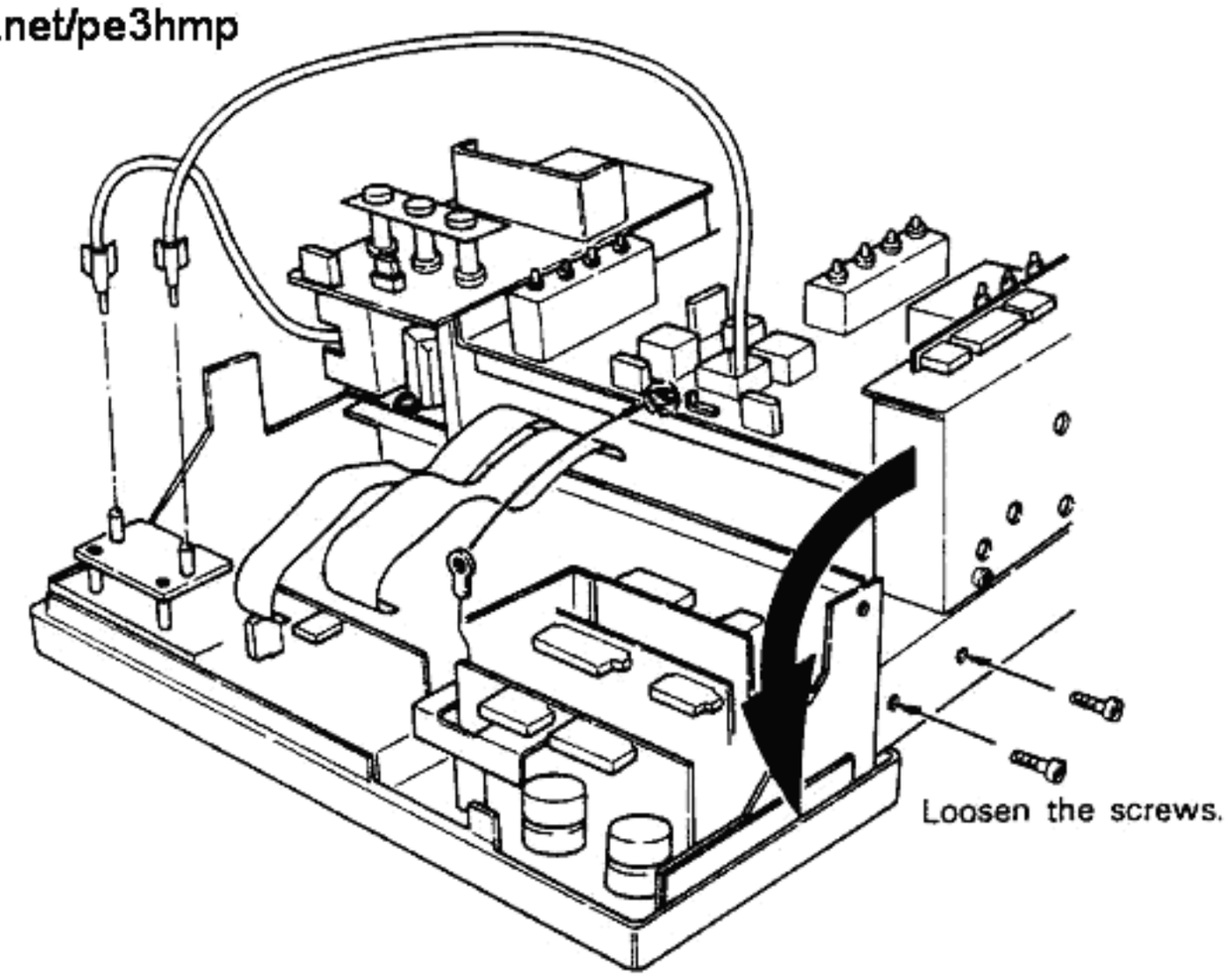

Fig. 2

3. Inspection and repairing of MIC VR Unit/AF VR Unit

1) Remove each knob/nut of MIC VR Unit or AF VR Unit.
2) Incline the front panel.
3) It can be removed from the front panel with the connectors still attached to it.

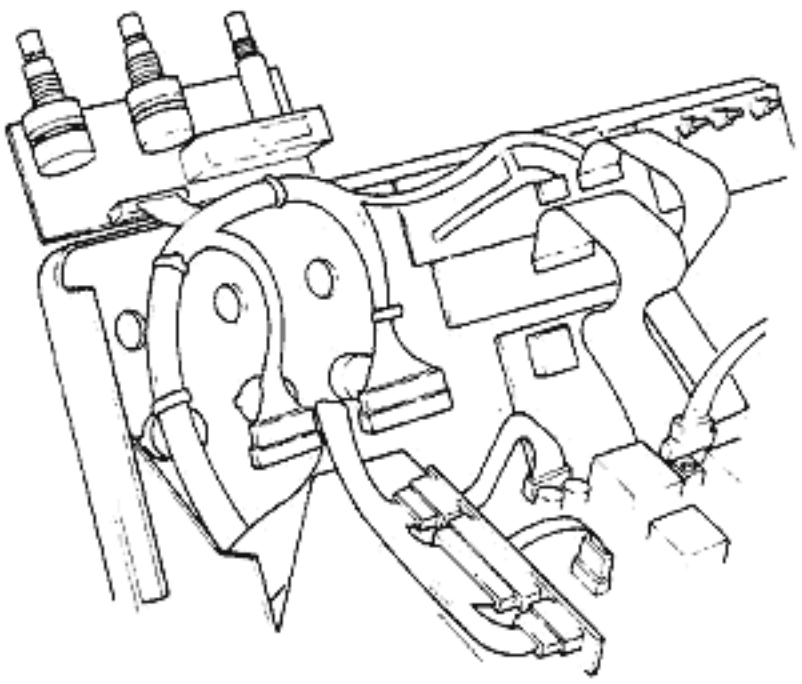

Fig. 3

4. How to remove the 6 key switch unit/band switch

1) Incline the front panel.
2) Remove the connector of the 6 Key Switch ASSY.
3) Remove the 3 screws shown in Fig. 4, then remove the 6 Key Switch Unit.
4) Remove the nut which holds the Band Switch ASSY in place as shown in Fig. 4.
5) Remove the Band Switch ASSY by sliding it slightly sidewise.

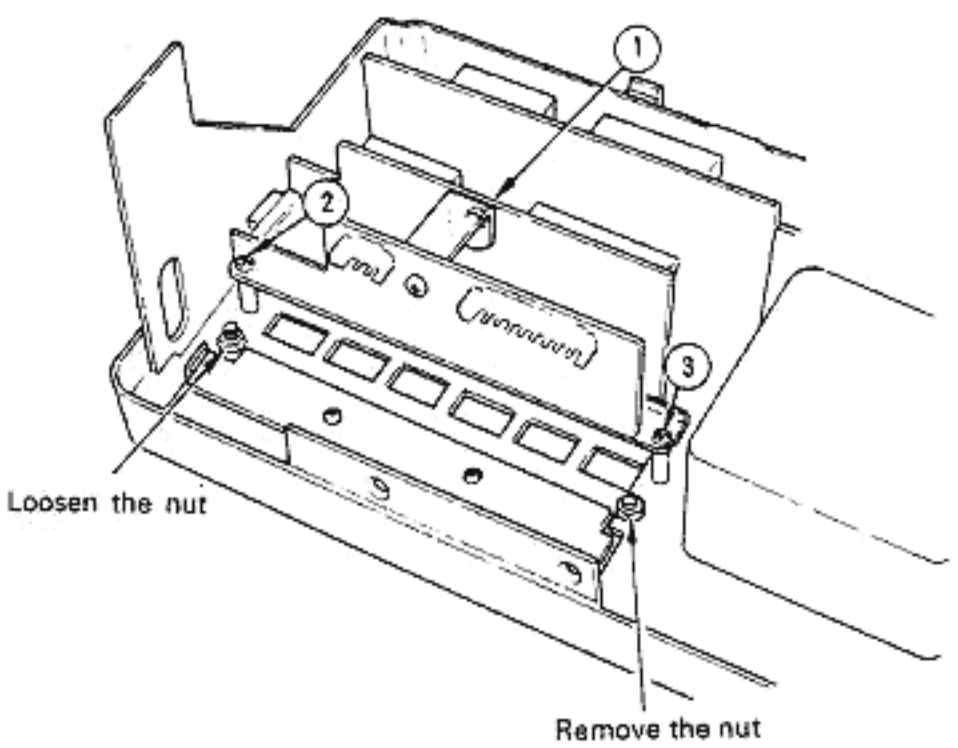

Fig. 4

5. How to remove the encoder unit

1) After removing the top and bottom cases, incline the front panel.
2) Remove the VFO knob with a 2.0 mm hexagonal spanner.
3) Remove the attachment nut of the Encoder Unit.
4) Remove the J2 Connector (55) of the Pulse Generating Unit.

6. Confirmation of the Tact Switch Stroke

1) Make certain that there is no play when the knob is touched.
2) Make certain that the stroke adjustment screw is in contact with the tact switch, but not pushing it.
3) Make certain the operation advances precisely one step each when the band knob is pressed.

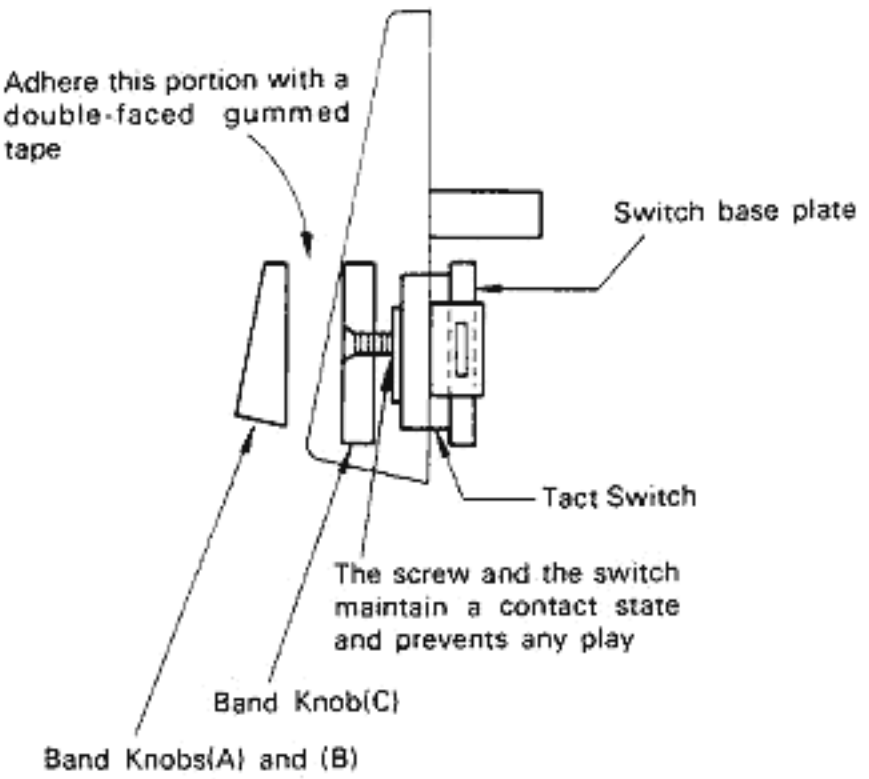

Fig. 5

7. Removing the RF unit

A. Removing the RF PC Board

1) Remove the all connector from RF unit.
2) Remove the condenser soldered to the FB terminal of the 430 MHz Final.
3) Remove the twelve screws (1 ~ 12) (as shown in Fig. 6)

B. Remove the RF PC Board with mounting bracket

1) Remove the all connector from RF unit
2) Remove the condenser soldered to the FB terminal of the 430 MHz Final.
3) Remove the screw (1, 5 ~ 11) (as shown in Fig. 6)

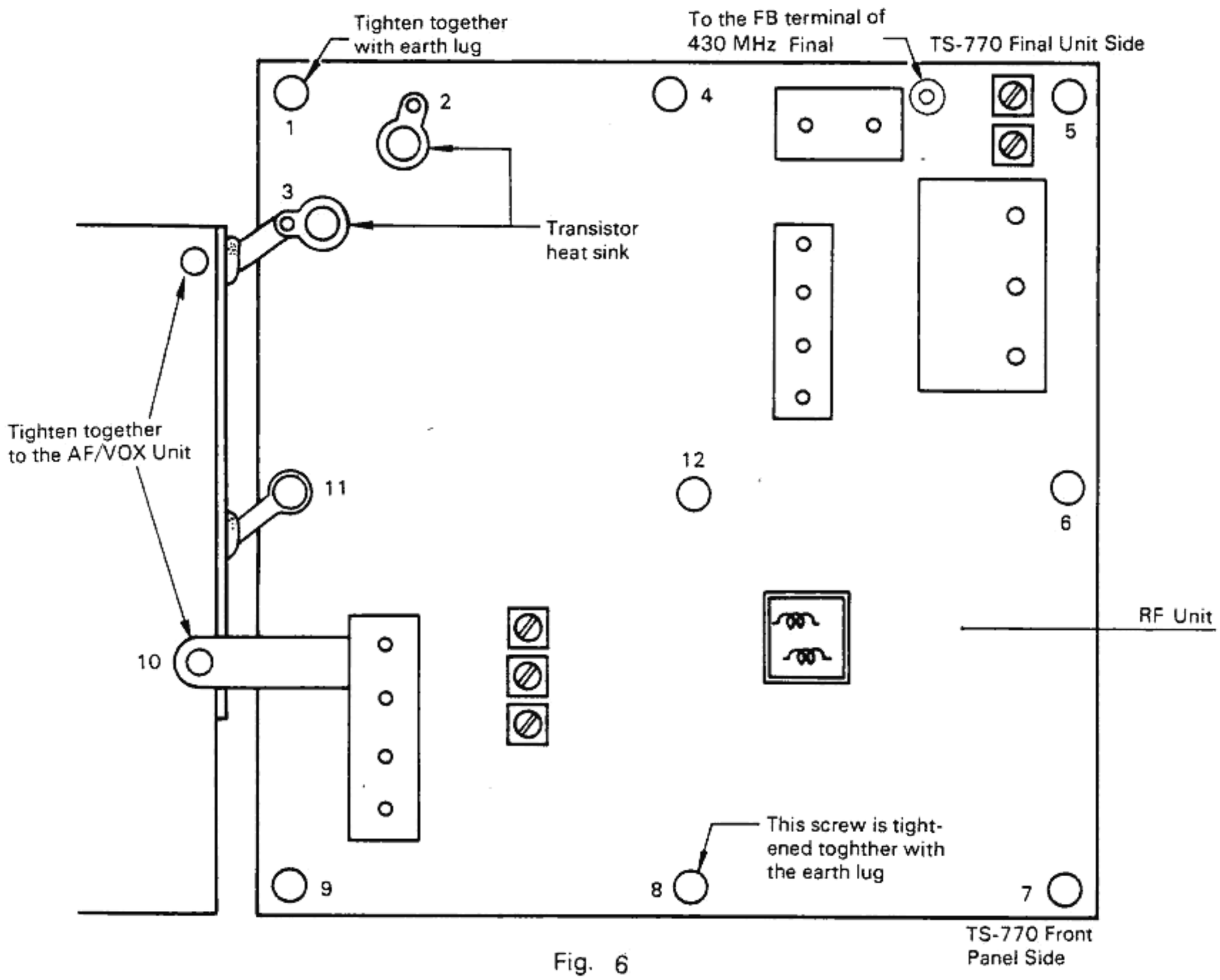

Fig. 6

8. How to remove the Final Unit

1) Remove the earth wire between the 430 unit and the PLL unit by removing the screw on the 430 unit side.
2) Disconnect the wire of FB terminal on the 430 unit.
3) Pull out the connector of the 144 unit.
4) Pull out the 14D, 43D, 14R, 43R connectors of the RF unit.
5) Remove the screw which holds the heat sink in place.
6) Remove the final unit from the back panel.

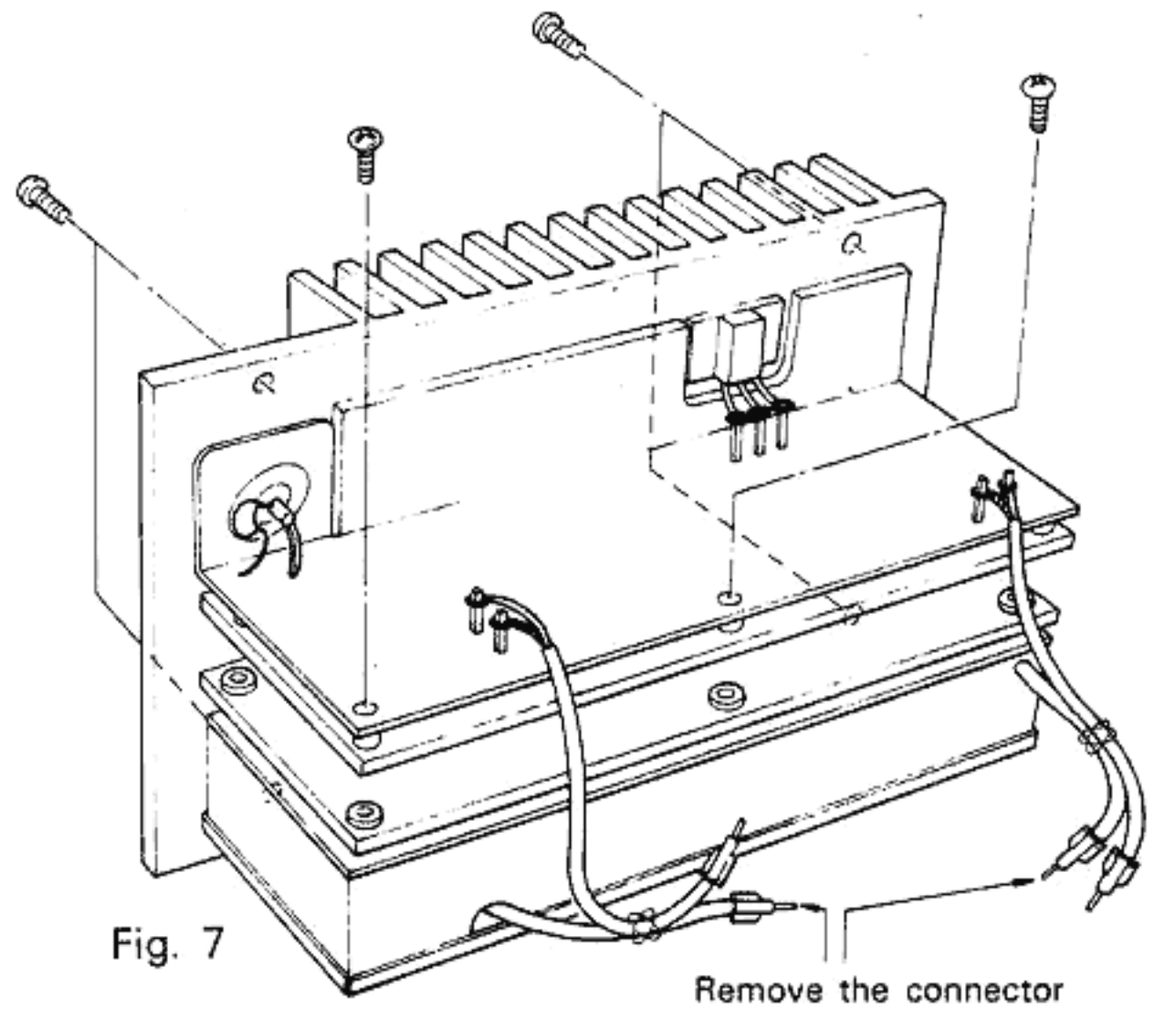

Fig. 7

9. How to remove the Flat Cable

1) The flat cable is removed by pulling slightly on the left side and right side alternately, as shown in Fig. 8.

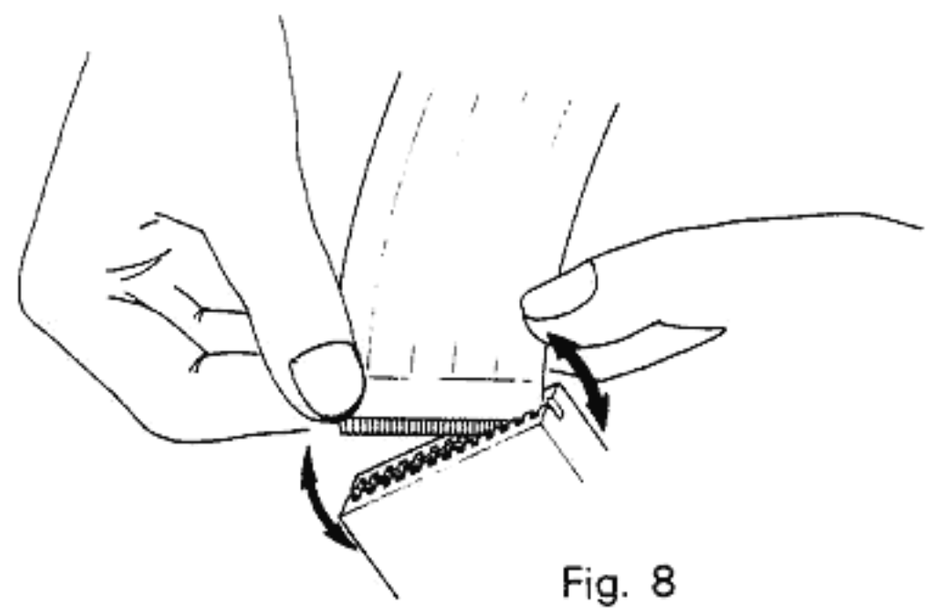

Fig. 8

ADJUSTMENTS

Testing Instruments

1. **Tester**
   - High input impedance
2. **RF VTVM (RF V.M)**
   - Input impedance: 1MΩmin., 2pF max
   - Votage range: F.S = 10 mV ~ 300V
   - Frequency range: Up to 450 MHz
3. **Frequency Counter (F count)**
   - Input sensitivity: Approx. 50 mV
   - Frequency range: Up to 450 MHz
4. **DC Power**
   - Voltage: 10V ~ 17V, variable
   - Current: 6A min.
5. **Power Meter**
   - Measurement range Approx. 20W
   - Input impedance: 50 Ω
   - Frequency range: 450 MHz
6. **AF VTVM (AF V.M)**
   - Input impedance: 1MΩmin.
   - Voltage range: F.S = 1 mV ~ 30V
   - Frequency range: 50 Hz ~ 10 kHz
7. **AF Generator (AG)**
   - Output frequency: 100 Hz ~ 10 kHz
   - Output voltage: 0.5 mV ~ 1V
8. **Linear Detector**
   - Frequency range: 450 MHz
9. **Field Strength Meter**
   - Frequency range: 450 MHz
10. **Directional Coupler**
11. **Oscilloscope**
    - High sensitivity oscilloscope with horizontal input terminal
12. **SSG**
    - Frequency range: 144 MHz and 430 MHz band.
    - Modulation: AM and FM MOD.
    - Output level: −10 dB to 120 dB
13. **Dummy Load**
    - 8Ω, 5W (approx.)
14. **Noise Generator**
    - Must generate ignition-like noise containing harmonics beyond 430 MHz.
15. **Sweep Generator**
    - Sweep range: 144 MHz and 430 MHz bands

Preparation

1) Unless otherwise specified, knobs and switches should be set as follows:

POWER SW	ON
SEND/REC SW	REC
VOX/MAN SW	MAN
ALC/RF SW	RF
LOW/HI SW	HI
TONE SW	OFF
VFO SW	CIR
MODE SW	CW
FUNCTION SW	A
RF GAIN VR	MAX(FULL COUNTER CLOCKWISE)
SQUELCH VR	MIN
S/F SW	OFF(SLOW)
SCAN SW	OFF
SEARCH SW	OFF
F.LOCK SW	OFF

2) Adjustments (trimmers, coils, etc.) should be made using an insulated rod such as a bakelite rod.
3) During adjustments of the receiver section, do not set the stand-by switch to SEND as this will damage the SSG.
4) Before connecting the power cord, be sure to set the power switch and VOX switch to OFF.

   Note: When the power switch is turned ON in the ON position of the VOX switch, the transceiver is momentarily set in transmit mode. Special care should be taken when adjusting the receiver section.
5) The output level of SSG is indicated as SSG's open circuit.

ADJUSTMENTS

A. TX/RX SECTION (COMMON)

Item	Conditions	Check point			Adjusting point			Standard	Remarks
		Testing Instruments	Unit	Terminal	Unit	Parts	Method		
1. Resistance measurement	1) MEMORY B.U SW on rear panel: ON	Ohm-meter	FINAL (144)	COL				More than 30Ω	
				FB				More than 10Ω	
			AVR	C8				More than 10Ω	open VR
				814				More than 30Ω	
				843				More than 10Ω	
			RE	ASW	300Ω			Not earthed	Check
				14T	50Ω				
				43T	250Ω				
				L16					
				L35	55Ω				WEL
			PLL (A)	8V				Not earthed	
				5V					
			MIC VR	5V				Not earthed	
2. AVR	1) POWER SW: OFF POWER terminal: AC P.S. (220V) SEND/RED SW: REC	DC V.M	AVR	BP				More than 7.0V	Check
		B.U lamp						ON	Check
	2) MEMORY B.U SW on rear panel: OFF	B.U lamp						OFF	Check
	3) POWER SW: ON TONE SW: OFF VFO SW: CIR FUNCTION SW: A SCAN SW: OFF SEARCH SW: OFF F.LOCK SW: OFF	DC V.M	AVR	13.8	AVR	VR1	Set to 13.8V	±0.1V	Check
				RB		VR3	Set to 0.6V	±0.1V	
				TBL				Less than −0.24V	
				−6				−6V ±0.5V	
				C8				8V ± 0.4V	
				RL				Less than 0.3V	
				14S				More than 4V	
				43S				More than 4V	
	4) BAND SW: 144	DC V.M	AVR	814				8V ± 0.3V	Check
				843				Less than 0.3V	
	5) BAND SW: 430	DC V.M	AVR	814				Less than 0.3V	Check
				843				8V ± 0.3V	
	6) MODE SW: USB RF GAIN VR: MAX	DC V.M	IF	RFI	IF	VR5	Set to 1.7V		
	7) SSB MIC VR: MIN SEND/REC SW: SEND	DC V.M	AVR	TBL	AVR	VR2	Set to 0.3V	±0.03V	
				RB				Less than −0.24V	Check
	8) MODE SW: USB SSB MIC VR: MIN BAND SW: 145								
	• SEND/REC SW: SEND	DC V.M	RF	14T	RF	VR1	Set to 9.0V		
	• SEND/REC SW: REC	DC V.M	RF	14T				Less than 0.3V	Check

ADJUSTMENTS

TX/RX SECTION (COMMON)

Item	Conditions	Check point			Adjusting point			Standard	Remarks
		Testing Instruments	Unit	Terminal	Unit	Parts	Method		
AVR	9) BAND SW: 430 • SEND/RED SW: SEND	DC V.M	RF	TP8	RF	VR2	Set to 9.0V		
	• SEND/REC SW: REC	DC V.M	RF	TP8				Less than 0.3V	Check
	10) SEND/REC SW: REC	DC V.M	PLL (A)	8V				8V ± 0.3V	Check
				5V				5V ± 0.25V	
LAMP	1) Continued from previous item	Meter lamp						All 3 lamps are ON	Check
		DISPLAY						All 8 digits are ON	
		ON AIR lamp						OFF	
	2) HI/LOW SW: HI MODE SW: FM, USB, LSB, CW	LOW lamp						OFF	Check
	3) HI/LOW SW: LOW • MODE SW: CW,LSB,USB	LOW lamp						OFF	Check
	• MODE SW: FM	LOW lamp						ON	
	4) F LOCK SW: ON	F. LOCK lamp						ON	Check
	OFF	F. LOCK lamp						OFF	
	5) RIT SW: ON	RIT lamp						ON	Check
	OFF	RIT lamp						OFF	
	6) S/F SW: ON (FAST)	FAST lamp						ON	Check
	OFF (SLOW)	FAST lamp						OFF	
VCV	1) MODE SW: USB FUNCTION SW: A SCAN SW: OFF SEARCH SW: OFF F. LOCK SW: OFF BAND SW: 144 VFO dial: 500	Synchro-scope	PLL (B)	TP4	PLL (B)	L9, 8	Adjust L9 and L8 to obtain maximum output. Adjust L8 for the clipped wave form (see figure at right).	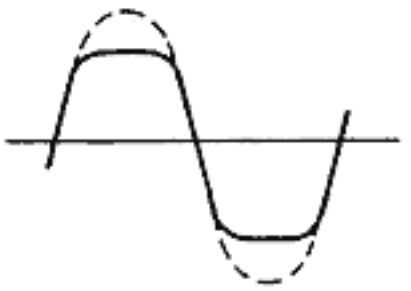	
	2) VFO dial: 000	DC V.M	PLL (B)	TP3 (R46)	PLL (B)	TC1	Set to 2.0V		
				TP1				More than 0.7V	Check
		RF V.M	PLL (A)	TP2	PLL (A)	T3,4 T5,6	MAX (repeat)	(More than 0.12V)	Fig. in ( ) is a value for reference.
	3) VFO dial: 500	RF V.M	PLL (A)	TP4	PLL (A)	T1,2	MAX (repeat)	(More than 0.3V)	
					VCO	L4			
	4) VFO dial: 000	DC V.M	PLL (A)	TP7	VCO	L1	Set to 1.2V		
	5) BAND SW: 434 VFO dial: 000	RF V.M	PLL (A)	TP4	VCO	L4	MAX		
				TP1				More than 0.25V 0.V	Check

ADJUSTMENTS

Item	Conditions	Check point			Adjusting point			Standard	Remarks
		Testing Instruments	Unit	Terminal	Unit	Parts	Method		
5. CAR	1) SEND/REC SW: REC MODE SW: CW	RF V.M	CAR	TP1	CAR	L6	MAX	More than 0.4V	OK
	2) MODE SW: LSB.USB.FM	RF V.M	CAR	TP1				More than 0.4V	Check OK
	3) MODE SW: FM	F. Count	CAR	TP1	CAR	TC3	8.8300 MHz	±500 Hz *Coarse adjustment.	
	USB					TC1	8.8315 MHz		
	LSB					TC4	8.8285 MHz		
	4) MODE SW: CW CAR VR: MIN SEND/RED SW: SEND	F. Count	CAR	TP1	CAR	TC2	8.83070 MHz	±100 Hz	
6. OSC	1) MODE SW: FM SEND/REC SW: SEND	F. Count	IF	TP6	IF	TC3	21.6000 MHz		
	2) MODE SW: USB	F. Count	IF	TP9	IF	L27	30.4300 MHz	±20 Hz	
7. VCO	1) VFO SW: CIR BAND SW: 145 • VFO dial: 000.0 • BAND SW: 144 VFO dial: 999.9	F. Count	RF	TP4	PLL (B)	VR1	Set the VR1 for frequency difference within 20 Hz between VFO dial 000.0 and 999.9	20 Hz	VR2: Coarse adjustment VR1: Fine adjustment
	2) VFO dial: 000 MODE SW: USB	RF V.M	RF	TP4	RF	T18	MAX		
8. RIT	1) RIT SW: ON RIT VR: 12 o'clock position	F. Count	RF	TP4			Check counter frequency		
	2) RIT SW: OFF	F. Count	RF	TP4	AF VR	VR4	Set to the frequency in item 1)	±20 Hz	
	3) RIT SW: ON • RIT VR: MIN • RIT VR: MAX	F. Count	RF	TP4				Check the frequency varries more than ±2 kHz from the frequency in Item 1).	Check
	4) SEND/REC SW: SEND RIT VR: Turn to left and right.	F. Count	RF	TP4				Frequency should remain unchanged	Check
9. VCO	1) MODE SW: USB SEND/REC SW: SEND BAND SW: 145	RF V.M	RF	D8 cathode	RF	T9, 8	MAX * If the core of T9 comes off the bobbin, set it on top of the bobbin.	(1V)	
10. ALC. M	1) ALC/RF SW: ALC ALC terminal on the RF unit: Connect 10 MΩ resistor between the terminal and the chassis.	ALC.M			RF	VR3	Set to "0" point on ALC meter.		
	2) ALC terminal on the RF unit: Remove the resistor.								

B. TX SECTION (144M BAND)

Item	Conditions	Check point			Adjusting point			Standard	Remarks
		Testing Instruments	Unit	Terminal	Unit	Parts	Method		
1 Setting	1) Rear panel 144 ANT terminal: POWER M POWER terminal: DC P.S (13.8V)								
	2) RF U 43D terminal: Remove coax-cable TC9: MIN TC10.12.13: MAX								
2 Bias adjustment	1) BAND SW: 145	DC A.M	FINAL (144)	TP1	FINAL (144)	VR2		25 mA	Remove the jumper wire and connect the ampere meter in series
3 Power setting	1) MODE SW: CW POWER SW: ON BAND SW: 145 VFO dial: 000 SEND/REC SW: SEND	RF V.M	IF	TP4	IF	L16.17	MAX (repeat)	(0.03V)	
				TP6	IF	L20.21 L22.23 L24.26	MAX (repeat)	(0.3V)	
	2) RF U 14D terminal: Connect coaxial cable.	POWER.M (DC A.M)			RF	TC7 T5.6.7 TC8.9 TC10. TC11	MAX (repeat) * Precisely adjust the final TC1 ~ 4	More than 18W	[Note for adjustments of TC8 and 9] Set the capacity of TC9 to minimum and adjust TC8 and TC9 in that order.
					FINAL (144)	TC1.2 TC3.4			
4 ALC	1) Continued from previous item.	POWER.M			RF	TC13	Set to 12W		
	2) ALC/RF SW: ALC CAR VR: Adjust so that the ALC meter pointer indicates the ALC zone.	ALC.M			IF	L16.17 L20.21 L22.23 L24.26	Adjust each coil and trimmer until the ALC meter reads max. Repeat this procedure.		If ALC meter deflects excessively, adjust CAR VR.
					RF	TC7 T5.6.7 TC8.9 TC10.11			[Note for adjustments of TC8 and 9] Set the capacity of TC9 to minimum and adjust TC8 and TC9 in that order.
	3) CAR VR: MAX	POWER.M DC A.M						Power: 12W DC.A: Less than 6A	Check
		ALC.M			RF	VR4	Set to "10" on RF scale.		
5 RF.M	1) ALC/RF SW: RF	RF.M			FINAL (144)	VR1	Set to "8" on RF scale.	±2	
6. Band edge	1) BAND SW: 144 ALC/RF SW: ALC	POWER.M DC A.M ALC.M						POWER: 10W DC.A: Less than 6A ALC.M: More than "9" on RF scale	Check
	2) BAND SW: 145 VFO dial: 999	POWER.M DC A.M ALC.M						POWER: 10W DC.A: Less than 6A ALC.M: More than "9" on RF scale	Check
7. Low power	1) VFO dial: 000 MODE SW: FM LOW/HI SW: LOW	POWER.M						Output is reduced.	Check

Item	Conditions	Check point			Adjusting point			Standard	Remarks
		Testing Instruments	Unit	Terminal	Unit	Parts	Method		
	2) SEND/REC SW: REC 144 ANT terminal on rear panel: POWER M(3W)								
	3) SEND/REC SW: SEND	POWER.M			IF	VR7	Set to 1.2W		
	4) BAND SW: 144	POWER.M						0.5W ~ 3W	
	5) BAND SW: 145 VFO dial: 999	POWER.M						0.5W ~ 3W	

C. TX SECTION (430M BAND)

Item	Conditions	Check point			Adjusting point			Standard	Remarks
		Testing Instruments	Unit	Terminal	Unit	Parts	Method		
1. Setting	1) Rear panel POWER terminal: DC P.S (13.8V)								
	2) RF unit 43D terminal: Remove coaxial cable								
2. MIX	1) IF U J4 connector: Remove POWER SW: ON BAND SW: 432 VFO dial: 500	RF V.M	MIX (A)	TP2	VCO	L5.6	MAX (repeat)	More than 0.09V	
	2) IF.U J4 connector: Connect								
	3) BAND SW: 434	RF V.M	MIX (A)	TP3	IF	L2.4. L6.7	MAX (repeat)		
	4) BAND SW: 435	RF V.M	MIX (A)	TP3	IF	L65.66 L68.69	MAX (repeat)		
	5) BAND SW: 434	RF V.M	MIX (A)	TP3	IF	TC1.2	MAX (repeat)		
	6) BAND SW: Set the level of MIX (A) to lower band with 434 or 435	RF V.M	MIX (A)	TP3	MIX (A)	TC1.2 TC3	MAX (repeat)	More than 0.25V	
3. BPF (1)	1) MODE SW: LSB SEND/REC SW: REC IF.U J4 connector: Remove MIX (A).U TP1 terminal: Connect the Sweep generator	Detector Oscilloscope	MIX (B) 43H Sweep generator		MIX (A) L6				
					MIX (A)	PT1	Turn the trimmer and the helical wave deflects as shown in Fig. A. Adjust so that the wave enters the 408 ~ 418 MHz band.		

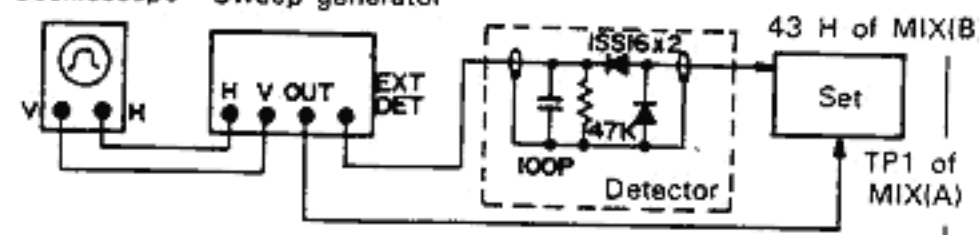

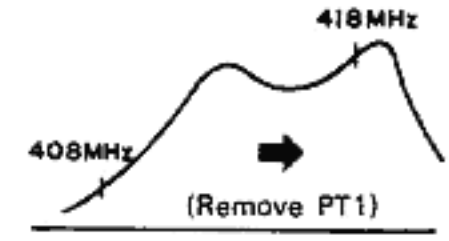

Fig. A

ADJUSTMENTS

'X SECTION (430M BAND)

Item	Conditions	Check point			Adjusting point			Standard	Remarks
		Testing Instruments	Unit	Terminal	Unit	Parts	Method		
BPF(1)					MIX (A)	PT2.3	These two trimmers adjust gain and bandwidth. Adjust them so that the markers of 408 MHz and 418 MHz are on the shoulder of the helical wave at maximum gain. *	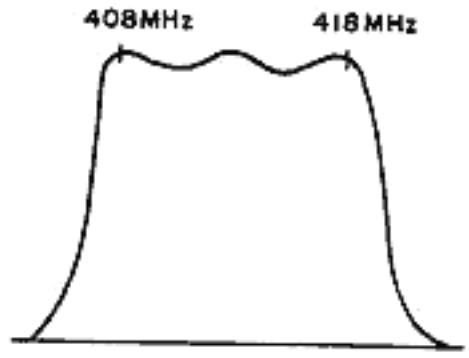	
							* While adjusting PT 2.3. adjust PT 1 ~ 3 alternately until the wave is stabilized.	(1) the wave should have sufficient height (gain). (2) Top of wave should be as flat as possible. (3) Marker should be on the shoulder of wave.	
						No good	Bandwidth is good but the peak on one side is too low.	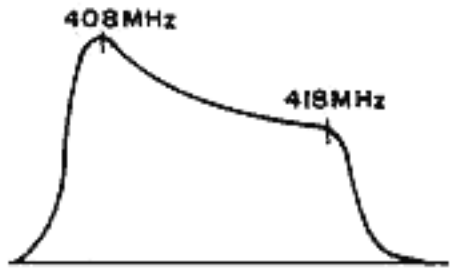	
							Waveform is good but marker is deviated to left.		
							Waveform is good but bandwidth is too wide.	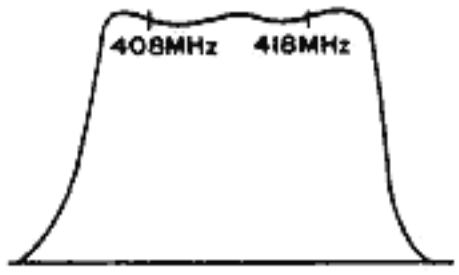	
							The center of wave is too high. It should be flat.	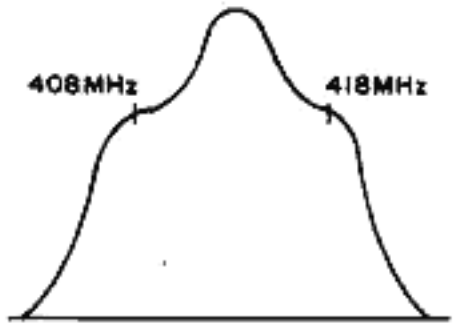	
							Bandwidth is good but the center of wave is too low.	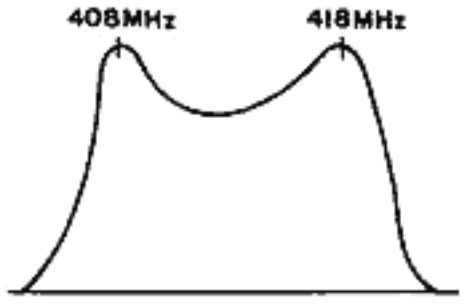	

ADJUSTMENTS

Item	Conditions	Check point			Adjusting point			Standard	Remarks
		Testing Instruments	Unit	Terminal	Unit	Parts	Method		
	2) IF.U J4 connector: Insert MIX (A) TP1 terminal: Remove Sweep MIX (B) 43H terminal: Remove detector BAND SW: 437 VFO dial: 000	RF V.M	RF	TP3	RF	TC15, TC16	MAX		
	3) BAND SW: 430～439 (all bands)	RF V.M	RF	TP3				More than 0.4V	Check
				TP9				More than 0.25V	
4. Bias adjustment	1) BAND SW: 433	DC A.M	FINAL (430)	*1 CK6 CK4 CK2	FINAL (430)	VR1 VR4 VR3		50 mA 40 mA 25 mA	*Remve the pass-through capacitor lead and connect ampare meter in series.
5. Power setting	1) RF.U 43D terminal: Connect coaxial cable BAND SW: 433 VFO dial: 500 MODE SW: CW CAR VR: MAX SEND/REC SW: SEND	POWER.M (DC A.M)			RF	TC1.2 TC3,17 TC5,6	MAX (repeat)	More than 15W	
					FINAL (430)	TC1.2.3 TC4,5	* Precisely adjust the final trimmer.		
6. BPF (2)	1) SEND/REC SW: REC RF.U J2 connector: Remove MODE SW: LSB RF.U J10 connector: Connect the Sweep generator	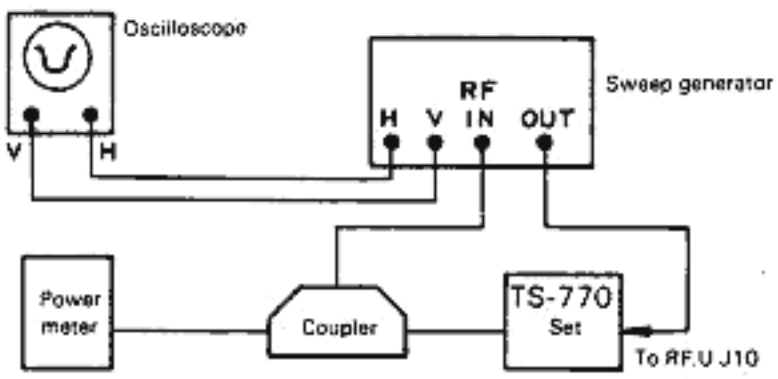							
	2) SEND/REC SW: SEND Sweep output: Level which does not saturate BPF wave. * *Reference ... Proper Sweep generator output derives about 2W output from TS-770.				RF	TC1.2.3 L4,TC17 TC5.6	Adjust these trimmers so that the markers of 430 MHz and 440 MHz are on the shoulder of the wave and that the height is maximum and uniform as shown at right.	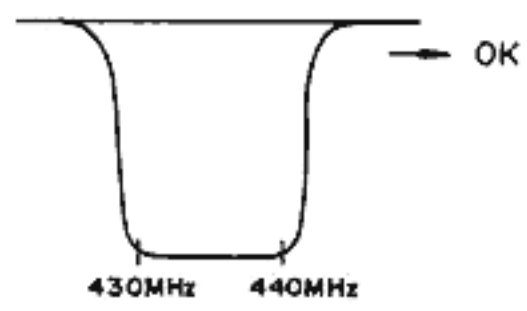 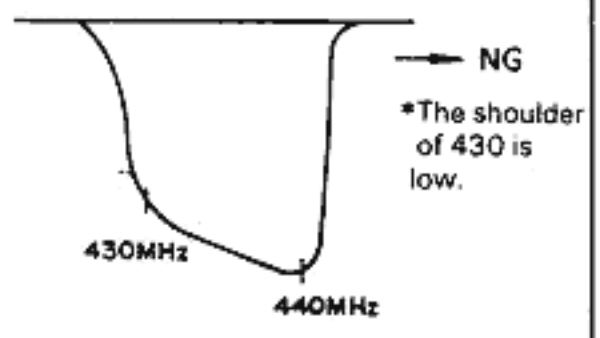 *The shoulder of 430 is low. 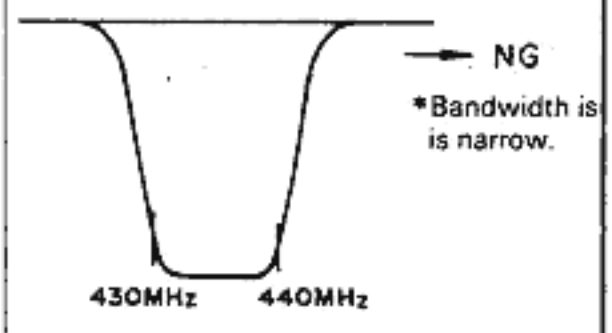 *Bandwidth is is narrow.	

ADJUSTMENTS

TX SECTION (430M BAND)

Item	Conditions	Check point			Adjusting point			Standard	Remarks
		Testing Instruments	Unit	Terminal	Unit	Parts	Method		
BPF(2)								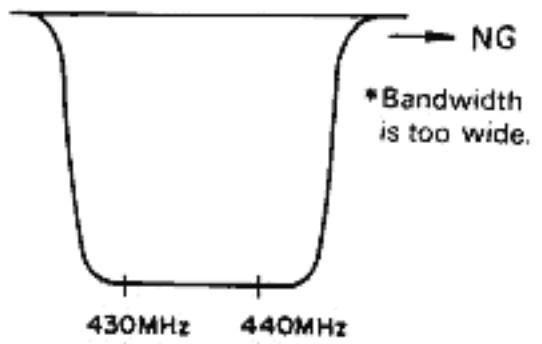	
	3) SEND/REC SW: REC RF. U J2 connector: Insert RF.U J10 connector: Remove Sweep generator								
	4) SEND/REC SW: SEND BAND SW: 430～439 (all bands)	POWER.M						More than 15W	Check
7. ALC	1) BAND SW: 433 VFO dial: 500	POWER.M			RF	TC12	Set to 12W		
	2) BAND SW: 430～439 (all bands) VFO dial: 000 ALC/RF SW: ALC	POWER.M ALC.M						More than 10W More than "7" on RF scale.	Check
	3) BAND SW:439 VFO dial: 999	POWER.M ALC.M						10W More than "7" on RF scale	Check
8. RF.M	1) BAND SW: 433 VFO dial: 500 ALC/RF SW: RF	RF.M			FINAL (430)	VR2	Set to "8" on RF scale	±2	
9. Low power	1) MODE SW: FM LOW/HI SW: LOW	POWER.M						Output is reduced	Check
	2) SEND/REC SW: REC 430 ANT terminal on rear panel: POWER.M (3W)								
	3) SEND/REC SW: SEND	POWER.M			AF/ VOX	VR4	Set to 1.5W		
	4) VFO dial: 000 BAND SW: 430～439 (all bands)	POWER.M						0.3W ～ 5W	Check

D. TX SECTION (144/430M BAND)

Item	Conditions	Check point			Adjusting point			Standard	Remarks
		Testing Instruments	Unit	Terminal	Unit	Parts	Method		
1. Setting	1) Rear panel POWER terminal: AC P.S (220V) 144 ANT terminal: POWER.M (20W)								
2. Spurious	1) CAR VR: MAX MODE SW: CW BAND SW: 144 VFO dial: 000 SEND/REC SW: SEND	Spectrum analyzer			IF	VR2	Set 144.76 MHz adjacent spurious to minimum.	Less than −60 dB.	
3. Carrier suppression	1) BAND SW: 145 CAR VR: MIN VFO dial: 000	Spectrum analyzer			IF	VR1 TC6	Adjust alternately to set the indication of analyzer to less than −40 dB.	Less than −40 dB	
	2) SSB MIC VR: MIN MODE SW: LSB.USB	Spectrum analyzer						Less than −40 dB	Check
4. SSB frequency response	1) MODE SW: USB MIC terminal: AG (2 mV/1500 Hz) SSB MIC VR: Set transmit output to 8W.								
	2) MIC terminal: AG (2 mV/400 Hz and 2600 Hz) MODE SW: USB	POWER.M			CAR	TC1	Change alternately the frequency of AG to 400Hz and 2600 Hz to obtain the same output.	More than 1W	
	3) MODE SW: LSB MIC terminal: AG (2 mV/400 Hz and 2600 Hz)	POWER.M			CAR	TC4	Change alternately the frequency of AG to 400Hz and 2600 Hz to obtain the same output.	More than 1W	
5. ALC.M	1) MODE SW: USB SSB MIC VR: MAX ALC/RF SW: ALC MIC terminal: AG (2 mV/1500 Hz)	ALC.M			RF	VR4	Set to "10" on RF scale.		
		POWER.M						More than 10W	Check
	2) MODE SW: LSB	POWER. M						More than 10W	Check
	3) MODE SW: USB SSB MIC VR: 3 o'clock position BAND SW: 144 VFO dial: 000	ALC.M						ALC meter should deflect beyond ALC zone.	Check
6. Frequency setting	1) BAND SW: 145 MODE SW: CW VFO dial: 000.0	F. Count			PLL (A)	TC1	145.000.00 MHz	±30 Hz	
	2) MODE SW: FM	F. Count			CAR	TC3	145.000.00 MHz	±100 Hz	
	3) MODE SW: CW	F. Count	PLL (A)	TP1			Check frequency obtained.		Check
	4) SEND/REC SW: REC	F. Count	PLL (A)	TP1	AF VR	VR5	Set to frequency 800 Hz lower than "f" in Item 3).		

ADJUSTMENTS

TX SECTION (144/430M BAND)

Item	Conditions	Check point			Adjusting point			Standard	Remarks
		Testing Instruments	Unit	Terminal	Unit	Parts	Method		
7 DEV (145 MHz)	1) MIC terminal AG (20 mV/1000 Hz) FM MIC VR MAX SEND/REC SW SEND	Linear detector			IF	VR6	Set to ±5.0 kHz		
	2) MIC terminal AG (2 mV/1000 Hz)	Linear detector						Setting to ±3.5 kHz with FM MIC VR should be possible	Check
	3) MIC terminal Remove AG SEND/REC SW REC TONE SW ON	Connect freq. counter to output terminal of linear detector			TONE	VR1	Set to 1750 Hz	±5 Hz	
		Linear detector						(1) More than 2.5 kHz (2) Transceiver should be set in transmit mode only when TONE SW is pressed	Check
8 DEV (433 MHz)	1) SEND/REC SW REC MIC terminal AG (20 mV/1000 Hz) 430 ANT terminal on rear panel POWER M								
	2) BAND SW 433 VFO dial 000 FM MIC VR MAX SEND/REC SW SEND	Linear detector						±4.0 kHz ~ ±6.0 kHz	Check
	3) IF U jumper connector Change from "N" to "W"	Linear detector			IF	VR3	Set to ±7.5 kHz		
	4) IF U jumper connector: Change from "W" to "N"								
9 SSB	1) MODE SW: USB SSB MIC VR: MAX BAND SW: 430 VFO dial: 000 MIC terminal: AG (2 mV/1500 Hz)	POWER M						More than 10W	Check
	2) ALC/RF SW ALC SSB MIC VR. 15 o'clock position.	ALC.M						ALC meter shoulg deflect beyond ALC zone.	
10 Frequency setting	1) MODE SW: CW CAR VR MAX BAND SW: 433 VFO dial 000.0	F. Count			IF	L1	433.000.00 MHz	±100 Hz	
	2) BAND SW: 435	F. Count			IF	L64	435.000.00 MHz	±100 Hz	
11 Side tone	1) SEND/REC SW: REC AF GAIN VR: MIN SIDE TONE VR: MAX EXP. SP terminal on rear panel: Connect speaker KEY terminal on rear panel: Connect key	AF V.M						Side tone output of 0.7V is obtained by pressing key.	Check

Item	Conditions	Check point			Adjusting point			Standard	Remarks
		Testing Instruments	Unit	Terminal	Unit	Parts	Method		
	2) SEND REC SW SEND	POWER M						Side tone output and transmit output are obtained by pressing key	Check
	3) SEND REC SW REC VOX MAN SW VOX DELAY VR MIN	POWER M						Side tone output and transmit output are obtained by pressing key Transceiver is set in receive mode by releasing key	Check

E. RX SECTION (144M BAND)

Item	Conditions	Check point			Adjusting point			Standard	Remarks
		Testing Instruments	Unit	Terminal	Unit	Parts	Method		
1 Setting	1) Rear panel POWER terminal AC P S (220V) EXT SP terminal Connect speaker								
2 S meter zero point	1) RF GAIN VR MAX BAND SW 145 VFO dial: 050	S M			RF	VR5	Set VR5 for S meter zero		
	2) RF GAIN VR MIN	S M						S meter deflects off scale.	Check
3 BPF	1) 144 ANT terminal on rear panel: Connect Sweep gen. MODE SW: FM RF GAIN VR: MAX PLL (A) U J3 connector: Remove RF U TP5 terminal: Connect detector	Oscillo-scope 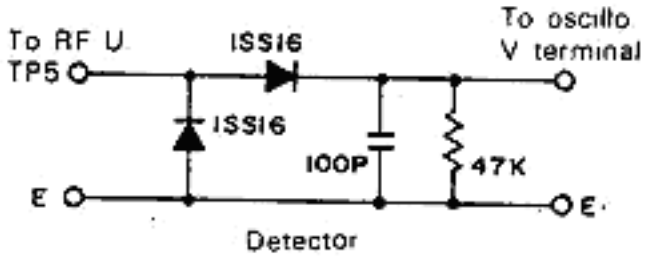 			RF	T16,17 L40	Adjust coil and trimmer for maximum gain and bandwidth	 	
4 Sensitivity adjustment	1) 144 ANT terminal on rear panel: SSG PLL (A) U J3 connector: Insert MODE SW: FM VFO dial: With 145.05 MHz signal applied from SSG, turn dial to receive signal and set S meter for maximum deflection.	DEV ..... ±5 kHz MOD ..... 1 kHz OUTPUT .... 10～20 dB							
	2) SSG OUTPUT: After receiving signal, reduce output as small as possible within the range of S meter deflection	S.M			RF	T10,11 T12,13 T14	MAX (repeat)		
	3) SSG OUTPUT: 20 dB (without modulation)	S.M			IF	VR8	Set to "9" on S meter scale.		

ADJUSTMENTS

RX SECTION (144M BAND)

Item	Conditions	Check point			Adjusting point			Standard	Remarks
		Testing Instruments	Unit	Terminal	Unit	Parts	Method		
5. C.M	1) SSG OUTPUT: 0 dB (with modulation) VFO dial: Set to optimum receive wave-form.	AF V.M			IF	L53	MAX	Repeat Items 1) and 2)	
	2) SSG OUTPUT: OFF (no signal)	C.M			IF	L54	Set to "0"		
	3) SSG OUTPUT: 20 dB (without modulation) VFO dial: Shift freq. in plus direction.	C.M						Center meter deflects beyond "E" of the second letter in "CENTER"	Check
	4) VFO dial: Shift freq. in minus direction.	C.M						Center meter deflects beyond "E" of the fifth letter in "CENTER"	Check
6. Squelch	1) SSG OUTPUT: −6 dB (with modulation) VFO dial: Receive signal and set AF VTVM for maximum reading.								
	2) BAND SW: 144 SQUELCH VR: Adjust until squelch is closed.							Squelch VR is in 9 ~ 12 o'clock position when squelch is closed.	Check
	3) BAND SW: 145							Receive signal again	Check
7. FM sensitivity	1) SSG OUTPUT: 0 dB BAND SW / VFO dial 145 / 050 144 / 050 145 / 950						Receive signals at each point at left and measure sensitivity.	More than 26 dB	Check
8. SSB sensitivity adjustment	1) MODE SW: USB BAND SW: 145 VFO dial: 050 Apply 145.05 MHz, 10 dB signal from SSG and	S.M			RF IF	T15 L28,29 L30,31 L32,38 L40	MAX (repeat)		
9. S.M	1) SSG OUTPUT: −3 dB VFO dial: Set S meter for maximum reading.	S.M			IF	L38	Set the S meter for one division of the scale by turning the core counterclockwise direction		
	2) SSG OUTPUT: 20 dB	S.M			RF	VR6	Set S meter for "9"		
10. NB	1) Continued from the previous Item	DCV.M	IF	TP8	IF	L35,36	MIN (repeat)		

F. RX SECTION (430M BAND)

Item	Conditions	Check point: Testing Instruments	Check point: Unit	Check point: Terminal	Adjusting point: Unit	Adjusting point: Parts	Adjusting point: Method	Standard	Remarks
1. Setting	1) Rear panel POWER Terminal: AC P.S (220V) 430 ANT terminal: Connect Sweep gen. EXT. SP terminal: Connect speaker								
2. BPF	1) MODE SW: FM BAND SW: 430 PLL (A) U J3 Connector: Remove RF U TP2 terminal: Connect detector	Oscillo-scope			RF	L30.33	Adjust coil and trimmer for maximum gain and bandwidth	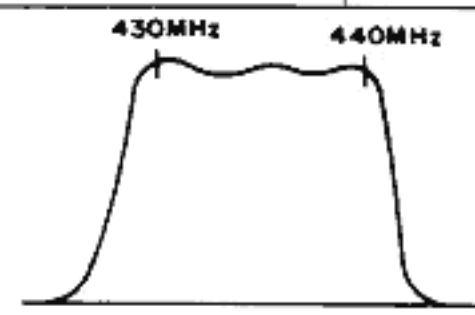	
3. FM sensitivity	1) MODE SW: FM 430 ANT terminal on rear panel SSG — DEV ..... ±5 kHz, MOD ..... 1 kHz, OUTPUT .. 0 dB								
	2) BAND SW / VFO dial 433 / 050 430 / 050 439 / 950						Receive signals at each point at left and measure sensitivity	More than 26 dB	Check
4. SSB sensitivity	1) SSG OUTPUT: 20 dB (without modulation) MODE SW: USB BAND SW: 433 VFO dial: 050	S M					Receive signal and set S meter for maximum reading. Adjust SSG output so that S meter reads S "9"	SSG output for S "9" 20 dB +8 dB −10 dB (10 dB ~ 28 dB)	Check
	2) SSG OUTPUT: −6 dB BAND SW / VFO dial 433 / 050 430 / 050 439 / 950						Receive signals at each point at left and measure sensitivity	More than 10 dB	Check

G. OPERATION CHECK OF MICRO COMPUTER SECTION

Item	Conditions	Check point			Adjusting point			Standard	Remarks
		Testing Instruments	Unit	Terminal	Unit	Parts	Method		
1. Reset	1) Rear panel POWER terminal: DC P.S (13.8V) MEMORY B.U SW: OFF								
	2) AF/VOX.U BZ connector: ON DISP connector: All indicate								
	3) Reset lug terminal (see figure at right) ① terminal: Connect digital voltmeter. ⑤ terminal: Connect oscilloscope.						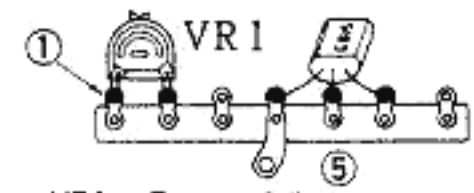 VR1: Turn to full clockwise direction		Input selector on oscilloscope: DC
	4) POWER SW: ON Adjust DC power voltage to obtain 3.70 V reading on digital voltmeter.	Oscilloscope	Reset lug terminal	⑤ terminal	Reset lug terminal	VR1	Set VR1 to obtain 0V on oscilloscope.		
	5) Adjust DC power voltage to increase oscilloscope voltage.	Oscilloscope	Reset lug terminal	⑤' terminal					
	6) Adjust DC power voltage for 0V on oscilloscope and check the reading of digital voltmeter.	Oscilloscope	Reset lug terminal	⑤ terminal				Reading of digital voltmeter at 0V of oscilloscope voltage: 3.70V ± 0.01V	Check
	7) POWER SW: OFF ① terminal: Remove digital voltmeter. ⑤ terminal: Remove oscilloscope.								
	8) Set DC power voltage to 13.8V								
2. DISP SW	1) POWER SW: ON MODE SW: FM,LSB,USB, CW	DISPLAY						(A 144.000 0) is displayed in all mode	
	2) AF/VOX.U DISP SW: NORM MODE SW: CW, LSB, USB	DISPLAY						(A 144.000 0) is displayed.	
	3) MODE SW: FM	DISPLAY						(A 144.000.0) is displayed.	
3. VFOSW	1) MODE SW: USB VFO dial: Counterclockwise	DISPLAY						(A 144.000.0) remains unchanged	
	2) VFO SW: CIR VFO dial: Turn to counter-clockwise direction	DISPLAY						(A 144.999.9) is displayed.	

Item	Conditions	Check point				Adjusting point		Standard	Remarks
		Testing Instruments	Unit	Terminal	Unit	Parts	Method		
4. Digit UP	1) VFO dial: Slowly turn clockwise.	DISPLAY						(1) Each digit changes normally: 0→1→2→3→4 · 8→9 (2) Frequency changes by 10 kHz at each turn of VFO dial	
5. F. LOCK	1) F LOCK SW: ON VFO dial: Turn clockwise and counterclockwise.	DISPLAY						Display remains unchanged	
	2) F LOCK SW: OFF								
6. S/F SW	1) VFO dial: 00 S/F SW: ON (FAST)	DISPLAY						(A 144.01) is displayed	
	2) MODE SW: USB VFO dial: Slowly turn clockwise.	DISPLAY						(1) Digits of 100 kHz changes as follows: 0→2→4→6→8→0. (2) Frequency changes by 100 kHz at each turn of VFO dial.	
	3) S/F SW: OFF (SLOW)								
7. BAND SW	1) BAND SW (UP): Press intermittently	DISPLAY						(1) Digits of MHz counts up as follows 144→145→430 · 431→432→433 · 434→435→436 · 437→438→439 · (2) Buzzer sounds each time freq. is changed.	
	2) BAND SW (DOWN): Press intermittently.	DISPLAY						Digits of MHz counts down in 1 MHz steps reversing the preceding Item 1)	
	3) BAND SW (UP): Press and hold	DISPLAY						Digits of MHz counts up in 1 MHz steps automatically each time buzzer sounds	
	4) BAND SW (DOWN): Press and hold	DISPLAY						Digits of MHz counts down in 1 MHz steps automatically each time buzzer sounds	
	5) BAND SW: Press UP and DOWN at the same time	DISPLAY						Same as when UP is pressed	UP takes precedence
8. BZ SW	1) AF/VOX.U BZ SW: OFF BAND SW (UP): Press and hold							Digits of MHz change but buzzer will not sound	
	2) AF/VOX.U BZ SW: ON								
9. SCAN	1) MODE SW: FM SCAN SW: ON	DISPLAY						Frequency counts up in 5 kHz steps.	
	2) S/F SW: ON (FAST)	DISPLAY						Frequency counts up in 20 kHz steps. not in 5 kHz steps	

http://www.qsl.net/pe3hmp

OPERATION CHECK OF MICRO COMPUTER SECTION

Item	Conditions	Check point			Adjusting point			Standard	Remarks
		Testing Instruments	Unit	Terminal	Unit	Parts	Method		
	3) S/F SW: OFF (SLOW)								
	4) SCAN SW: OFF								
10. MEMORY	1) BAND SW: 145 VFO dial: 000.0 (FUNCTION SW: A)	DISPLAY						(A 145.000.0) is displayed	
	2) FUNCTION SW: B	DISPLAY						(b 144.000.0) is displayed	
	3) FUNCTION SW: FIX	DISPALY						(1) is displayed	
	4) FUNCTION SW: A MEMORY SW: ON								
	5) FUNCTION SW: FIX	DISPLAY						(1 145.000.0) is displayed	
	6) BAND SW: Press UP and DOWN	DISPLAY						Display in Item 5) remains unchanged	
11. FIX CH	1) FIX CH SW: Press intermittently	DISPLAY						(1) Display changes as follows 1 145.000.0 ↓ 2 ↓ 3 ↓ 4 ↓ 5 ↓ 6 ↓ 7 ↓ 8 ↓ 1 145.000.0 (2) Buzzer sounds at change of channel	
	2) FIX CH SW: Press and hold	DISPLAY						Channel changes automatically each time buzzer sounds	
	3) MODE SW: FM SCAN SW: ON	DISPLAY						Same as Item 2), but buzzer will not sound.	
	4) SCAN SW: OFF								
12. MEMORY B.U	1) MODE SW: USB FUNCTION SW: A POWER SW: OFF								
	2) POWER SW: ON (MEMORY B.U SW: OFF)	DISPLAY						(A 144.000.0) is displayed	
	3) MEMORY B.U SW: ON BAND SW: 145								

Item	Conditions	Check point			Adjusting point			Standard	Remarks
		Testing Instruments	Unit	Terminal	Unit	Parts	Method		
	4) POWER SW: OFF 5) POWER SW: ON	DISPLAY						(A 145 000 0) is displayed	
13 FUNCTION	1) FUNCTION SW: A-B	DISPLAY						(A 145 000 0) is displayed	
	2) SEND/REC SW: SEND	DISPLAY						(b 144 000 0) is displayed	
	3) SEND/REC SW: REC FUNCTION SW: B-A	DISPLAY						(b 144 000 0) is displayed	
	4) SEND/REC SW: SEND	DISPLAY						(A 145 000 0) is displayed	
	5) SEND/REC SW: REC								
14 SEARCH	1) SEARCH SW: ON	DISPLAY						Display counts up repeatedly from 144 000 0 to 144 100 0	
	2) SCAN SW: ON	DISPLAY						Operation in item 1) is repeated	SEARCH takes precedence.
	3) F. LOCK SW: ON	DISPLAY						Operation in item 1) is repeated	SEARCH takes precedence.
	4) SEARCH SW: OFF	DISPLAY						Scanning (UP scan in 5 kHz steps)	SCAN takes precedence.
	5) SCAN SW: OFF POWER SW: OFF								

http://www.qsl.net/pe3hmp

H. OPERATION CHECK OF ENCODER ASSEMBLY

Item	Conditions	Check point			Adjusting point			Standard	Remarks
		Testing Instruments	Unit	Terminal	Unit	Parts	Method		
1 Setting	1) POWER terminal on rear panel: AC 220V Use motor instead of VFO knob.	Oscilos-scope	Digital	J5-V1			Set the sweep knob of oscilloscope to 0.2 msec/DIV. Set motor speed for 8 div. between "a" and "b".	Motor speed- 300 rpm 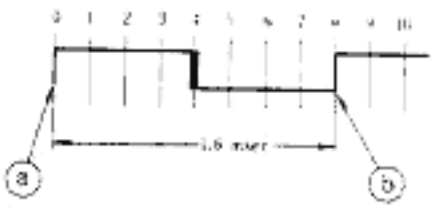 When checking the duty ratio without using the moter, turn the VFO knob by hand.	
2. V1 duty ratio	1) Set sweep knob of oscilloscope to 0.1 msec/DIV	Oscillo-scope	Digital	J5-V1			Set the variable knob of oscilloscope to 9 div.		
	2)				Encoder	VR3	Set the position "c" to 4.5 div.	4.5 div ±0.5 div 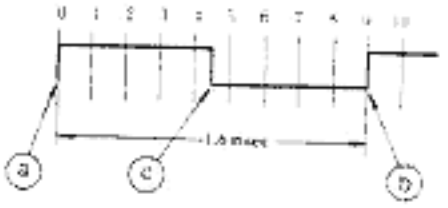	
3 V3 duty ratio	1) Continued from Item 1)	Oscillo-scope	Digital	J5-V3	Encoder	VR2	Set the position "c" to 4.5 div	4.5 div ±1.5 div	
4 V1 - V3 phase difference	1) Set the sweep knob of oscilloscope to 50 μsec/DIV. Do not touch variable knob.	Oscillo-scope	Digital	J5-V1 J5-V3				V1 – V3 phase difference: 4.5 div. ±1 div. 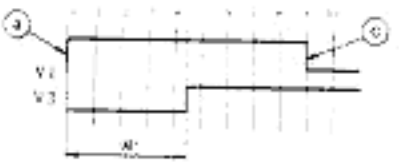	Check

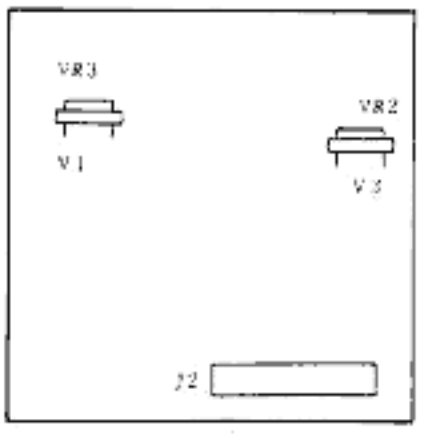

Pulse generator unit

ADJUSTMENTS

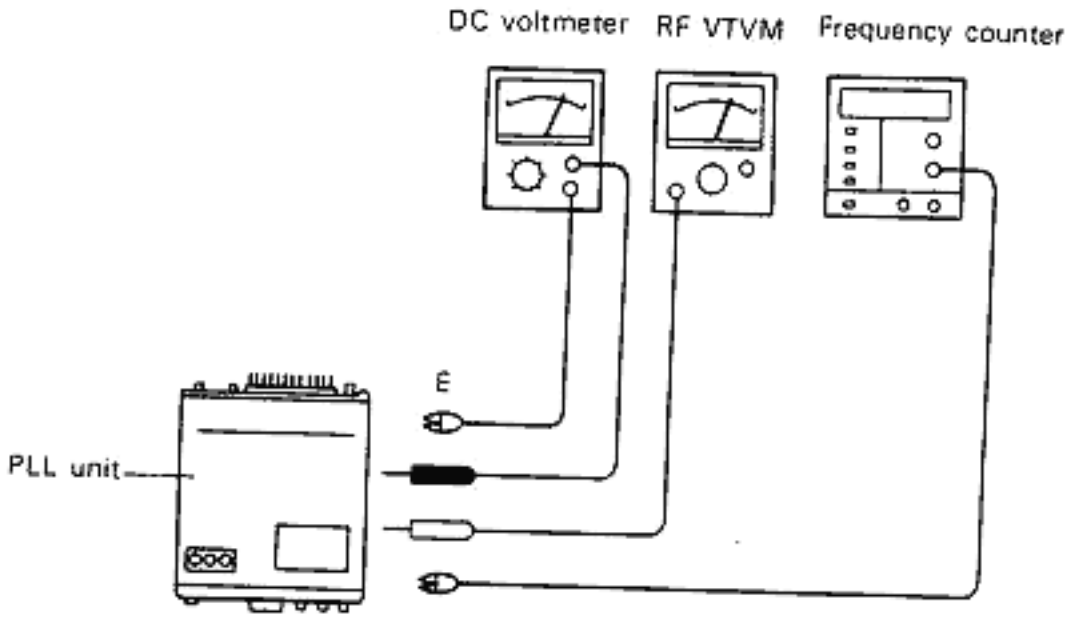

Fig. 1 Adjustment of PLL unit

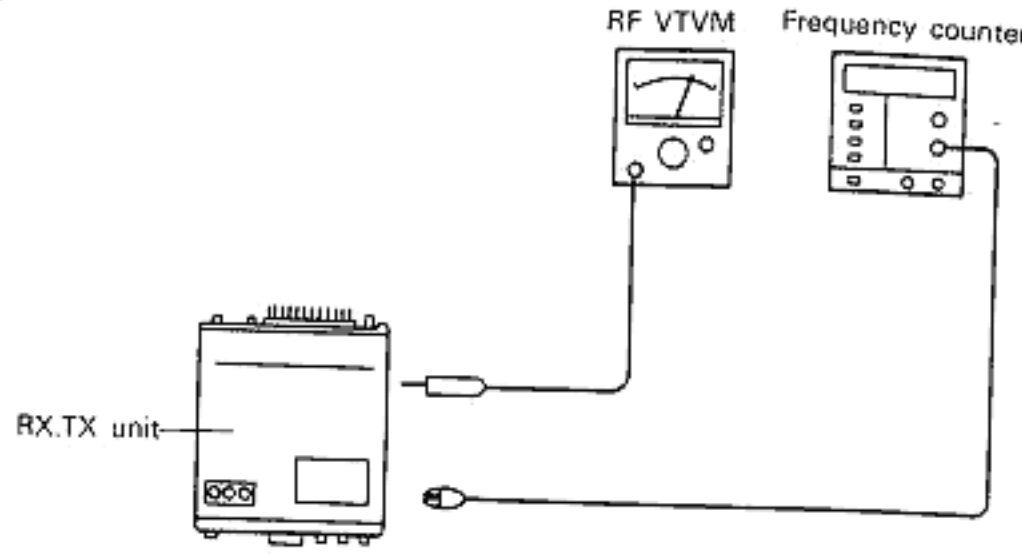

Fig. 4 Adjustment of 10.7 MHz and drive

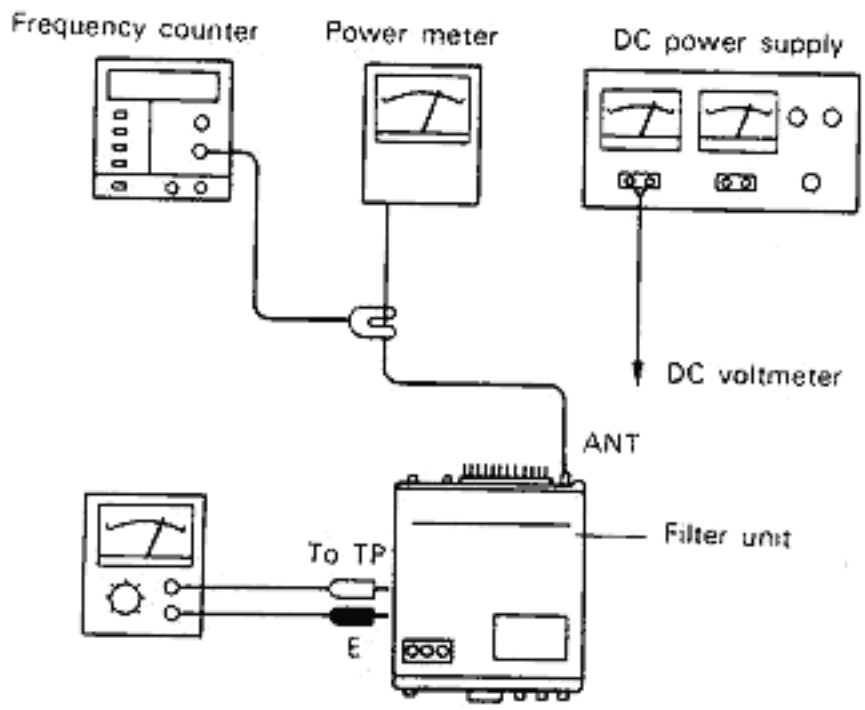

Fig. 2 Adjustment of PA unit and check of TX frequency

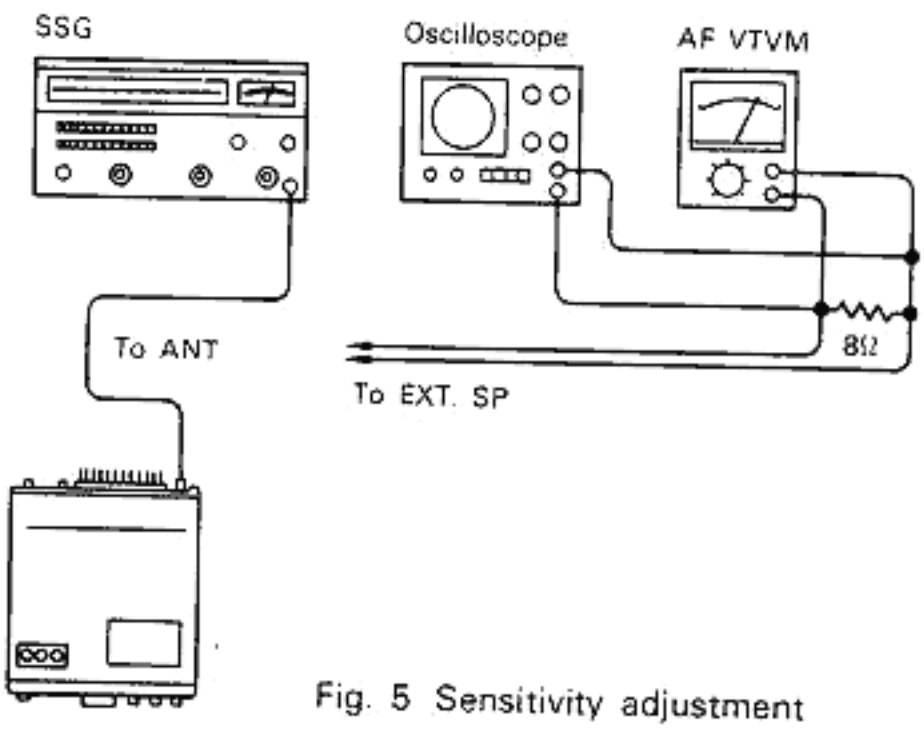

Fig. 5 Sensitivity adjustment

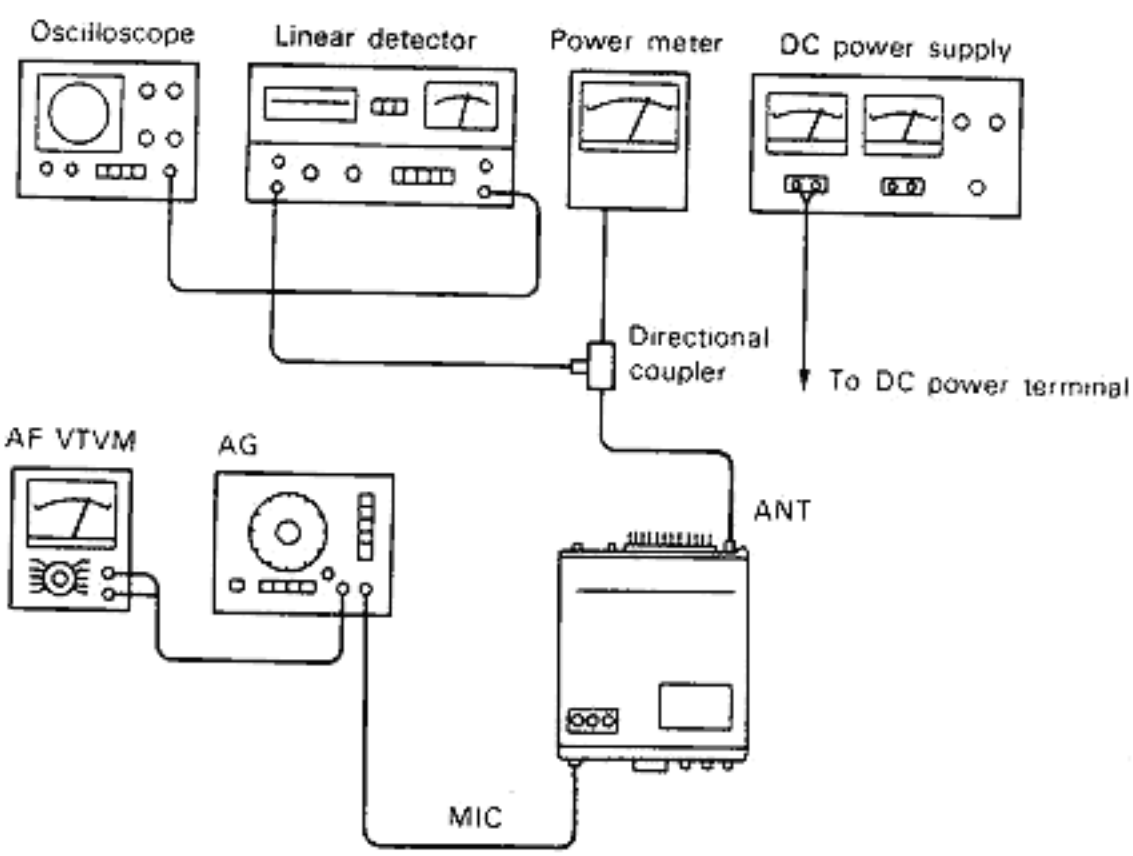

Fig. 3 Deviation adjustment

LEVEL DIAGRAM

[Transmitting Portion]

1. The portion which is not designated is 145.05 MHz, Mode USB
   MIC terminal input: 3 mV, 1.5 kHz
   MIC gain: CENTERED

[Receiver Section]

The figures shown are signal generator output requered for a constant audio output with a constant AF gain control setting. Set the AF gain control for 0.63V/8Ω(50 mW) audio output at −6 dB (0.5 μV) signal generator input at 145.05 MHz. (USB Mode)

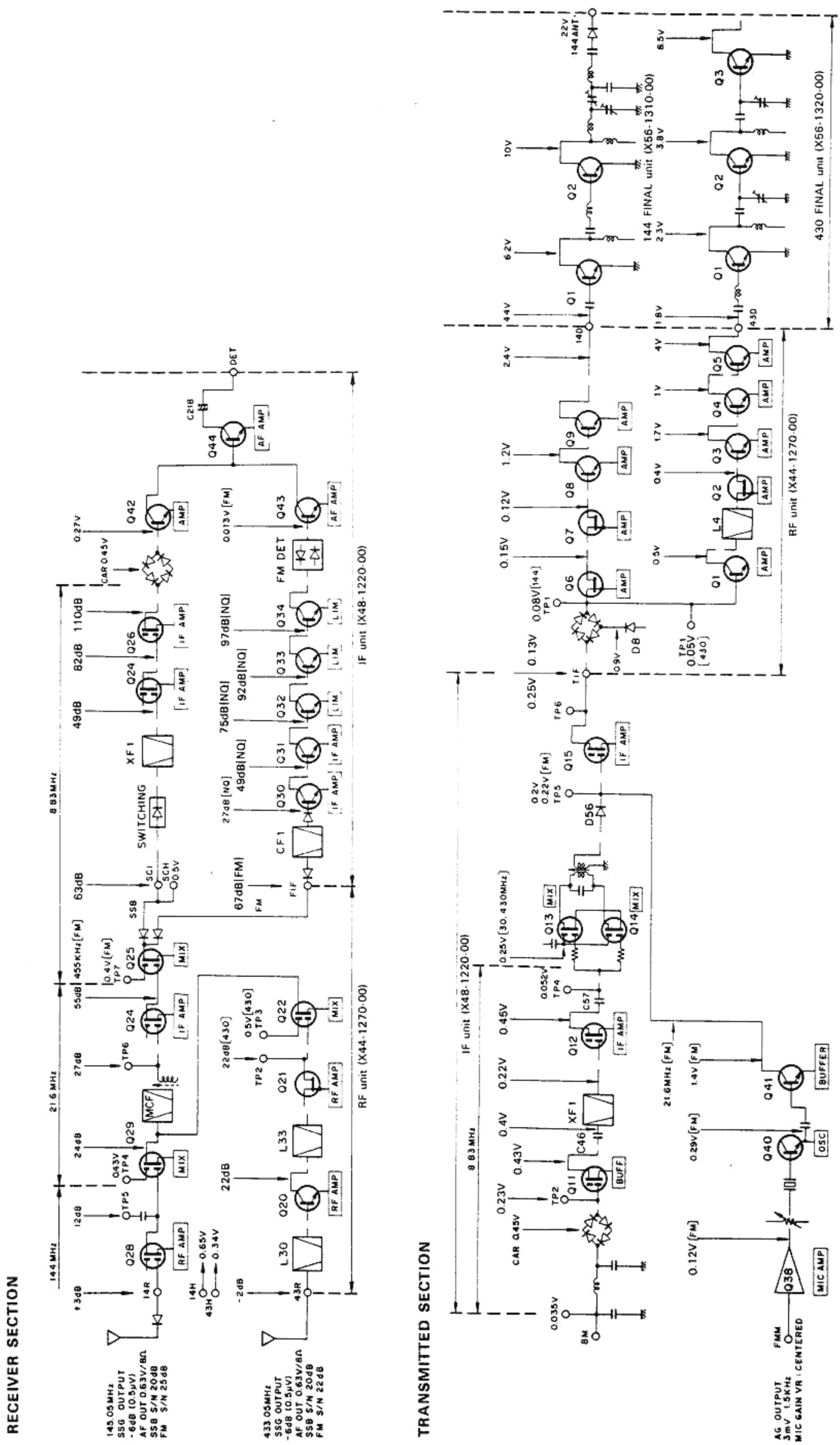

ADJUSTMENTS

TOP INTERNAL VIEW

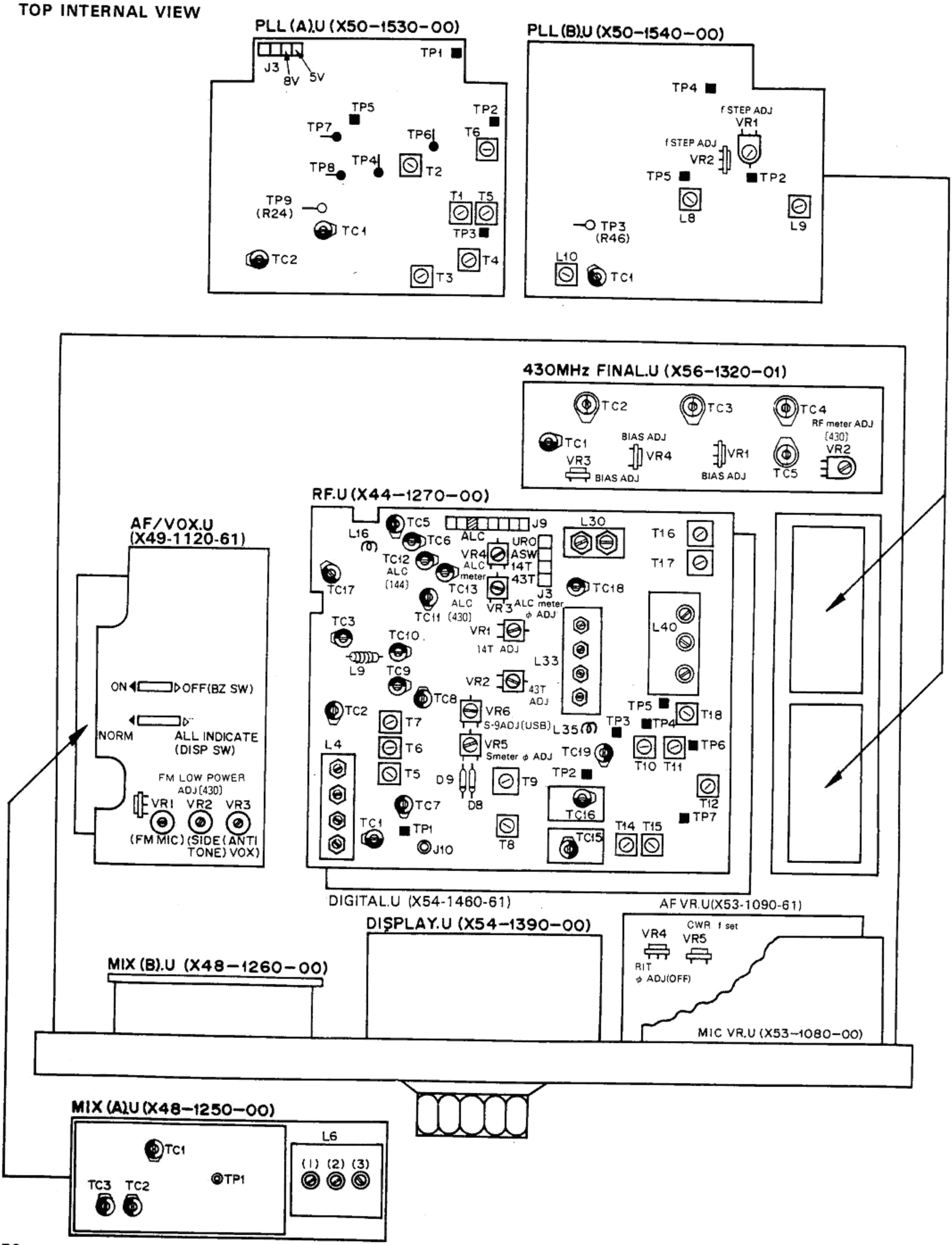

ADJUSTMENTS

BOTTOM INTERNAL VIEW

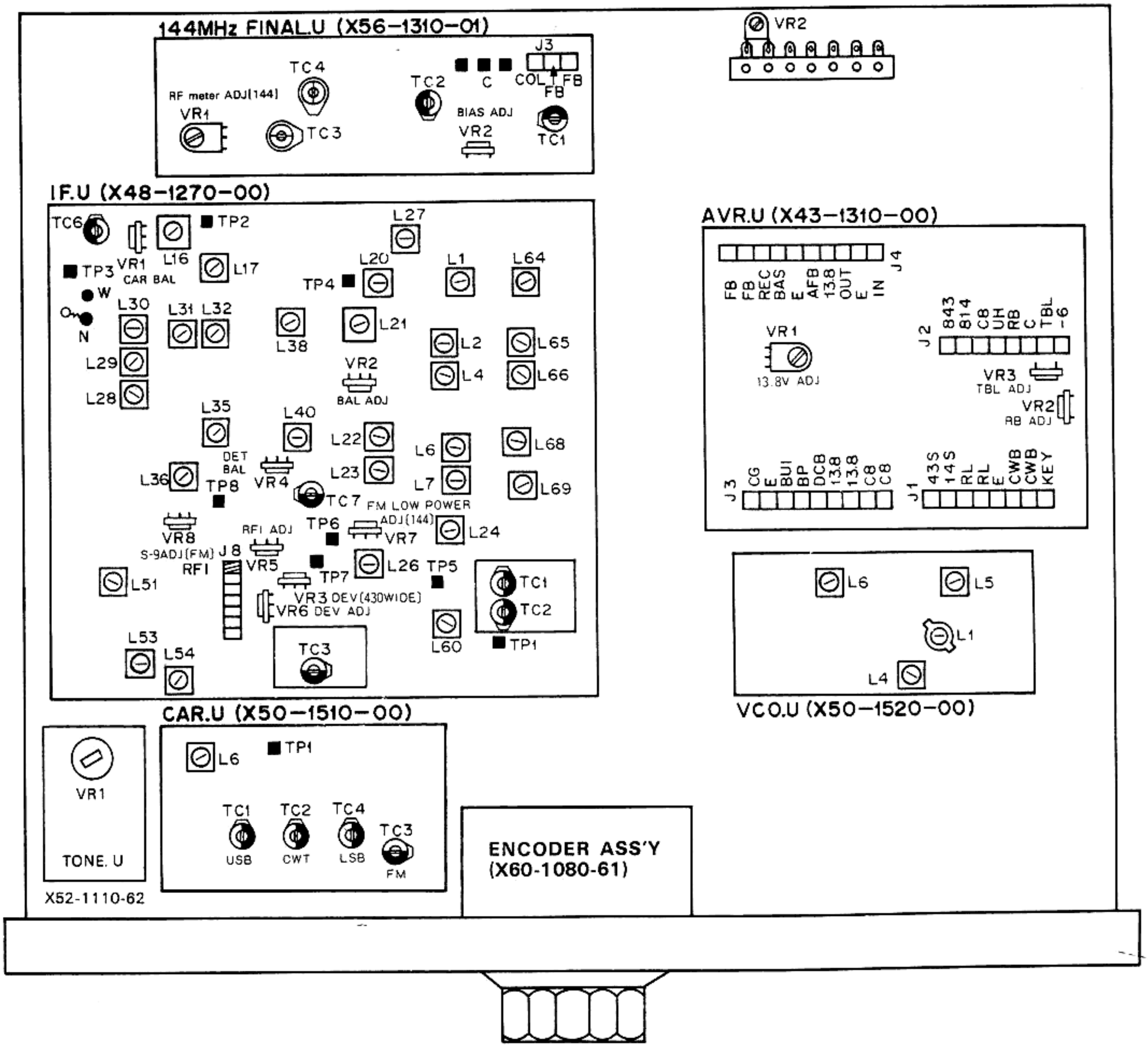

CIRCUIT DIAGRAM

RF Unit (X44-1270-00)

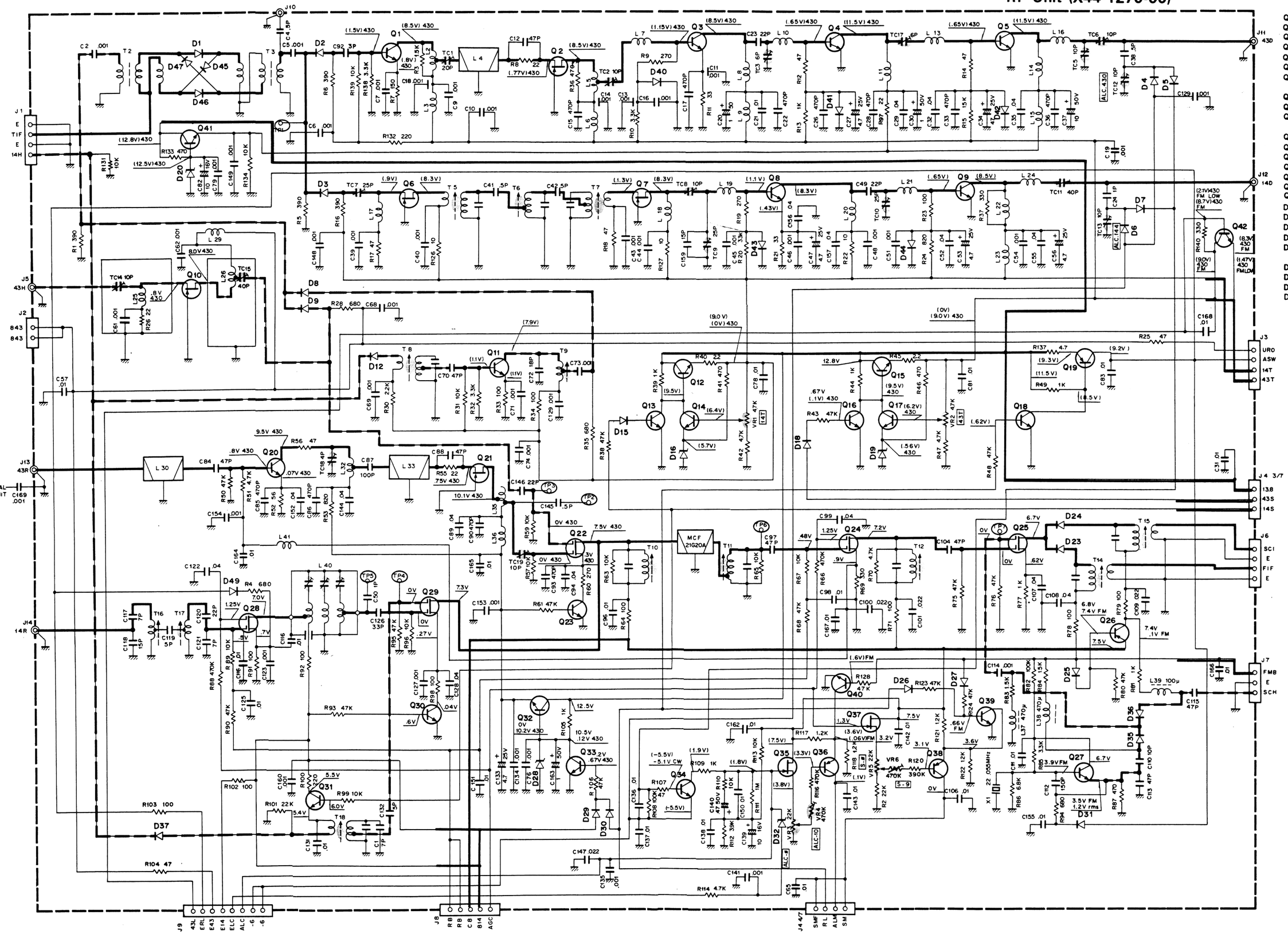

Q2,6,7,10,21	: 2SK125
Q3.8	: 2SC2407
Q4.5	: MRF629
Q9	: 2SC741
Q11	: 2SC387A
Q12.15.41	: 2SD235
Q13.14.16~18.23 30.31.33.34.39.40	: 2SC1815(Y)
Q19	: 2SA562(Y)
Q1,20	: 2SC2549
Q22	: 3SK92 or 3SK76
Q24.25	: 3SK74(L)
Q26.36.38	: 2SA1015(Y)
Q27	: 2SC460(B)
Q28.29	: 3SK40(L)
Q32	: 2SC735(Y)
Q35.37	: 2SK19(GR)
Q42	: 2SC496(Y)
D1,45~47	: 1SS97
D2.3.8,9	: 1S2588
D4~7.25	: 1N60
D12,23,24,35~37	: 1S1587
D15,18,26,27,29~31 41.42.44.49	: 1S1555
D16.19.32	: XZ060
D20	: XZ132
D28	: XZ117
D40,43	: MU13

CIRCUIT DIAGRAM

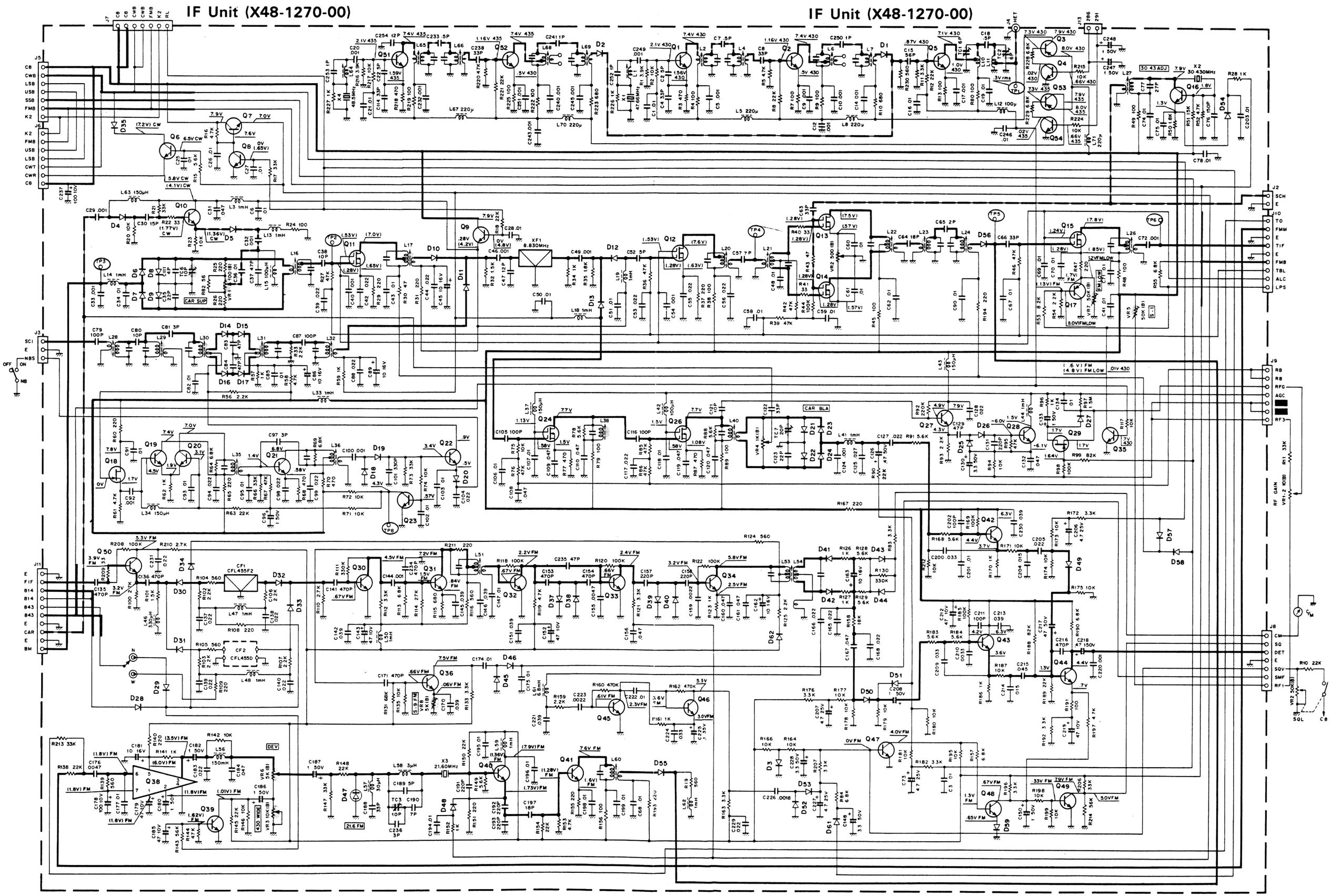

Q1,2,10,16,19~21,30~34, 40,41,50~52	: 2SC460(B)	Q11~15,24,26	: 3SK74 (L)	D1,2	: 1S2588
Q3,17,53	: 2SA1015(Y)	Q18	: 2SK19 (GR)	D3	: 1S1212
Q4,6~9,22,23,27,28, 35,39,42~49	: 2SC1815(Y)	Q29	: 2SK30A(O)	D4,27~29,34,35, 37~40,48~51, 54~59,61,62	: 1S1555
Q5	: 2SC387A	Q36	: 2SC1345(E)		
		Q38	: TA7061AP		

D5,10~17,30~33	: 1S1587
D6~9,18,19,21~26, 41~46,52,53	: 1N60
D20	: MV-13
D47	: 1S2208

2SA1015(Y)
2SC1815(Y)
2SC1959(Y)

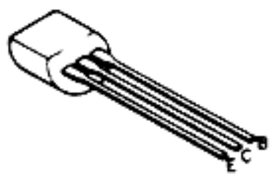

2SA562(Y)
2SC387A
2SC735(Y)
2SC1000(GR)

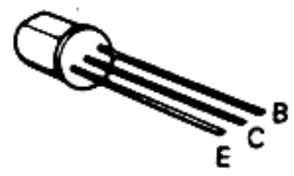

2SA671TD(B)
2SD235(Y)

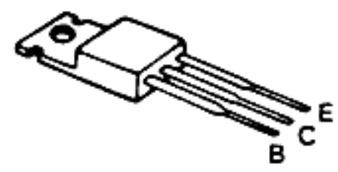

FS-7805M
FS-7808M
μPC14305H

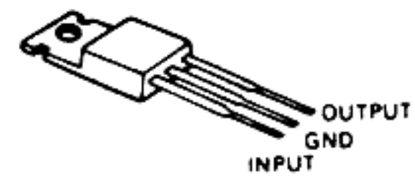

2SC496(Y)

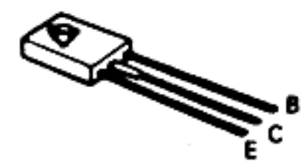

2SK19(GR)

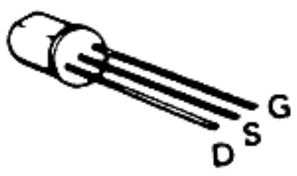

2SK30A(GR)

2SC2407
2SC2549

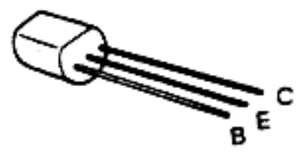

2SK125

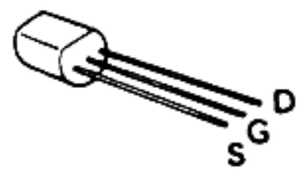

2SC2118

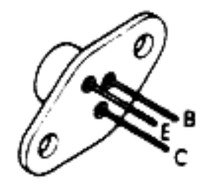

2SC460(B)
2SC1345(E)

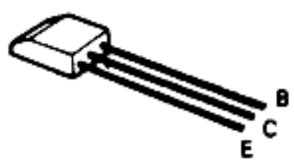

μPC78L05

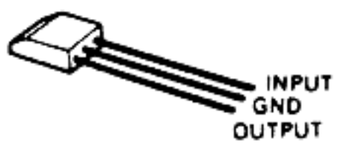

2SC741

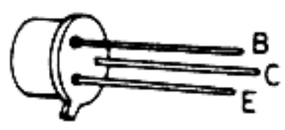

MRF629

3SK40(L,M)
3SK76
3SK92

2SC2103A
2SC2380
2SC2381
2SC2391

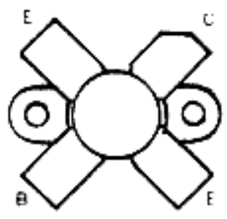

3SK74(L)

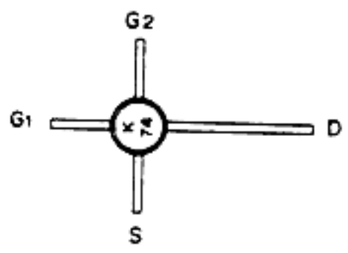

TA7060P
TA7061AP

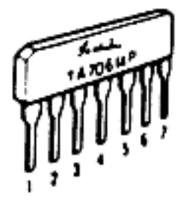

LM358P
SM6422A
SN16913P

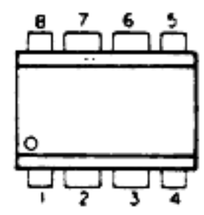

MB3756

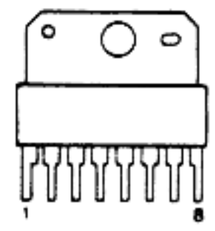

TA7310P

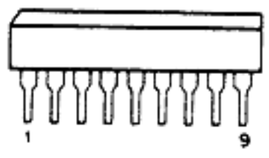

HA1366W

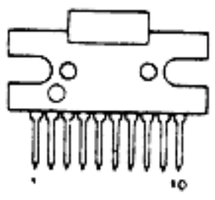

TC9122P

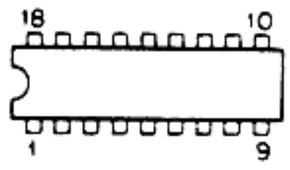

HD74154P

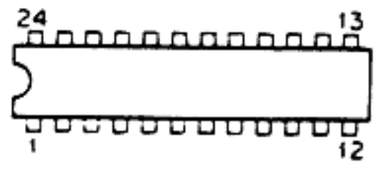

MN9004

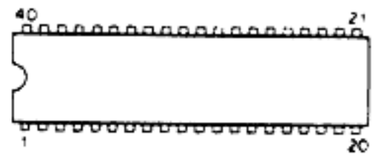

TC4011BP
HD74LS00P
SN74LS03N
HD74LS08P
HD74LS132P
HD74LS02P

HD7404P
HD74LS30P
TD3409AP
SN74LS02N
HD74LS10P
HD74LS03P

SN74LS00N
HD74LS04P
HD74LS32P
HD74LS20P
HD74LS11P
MC4044P
TD3490BP

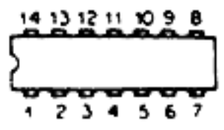

SN74LS247N
MC14049B
HD74LS151P
MN1201A
HD74221P
TD34192BP

HD74LS42P
HSM5507RS
HD74LS75P
HD74LS157P
SN74221N
MC14568B

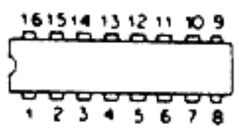

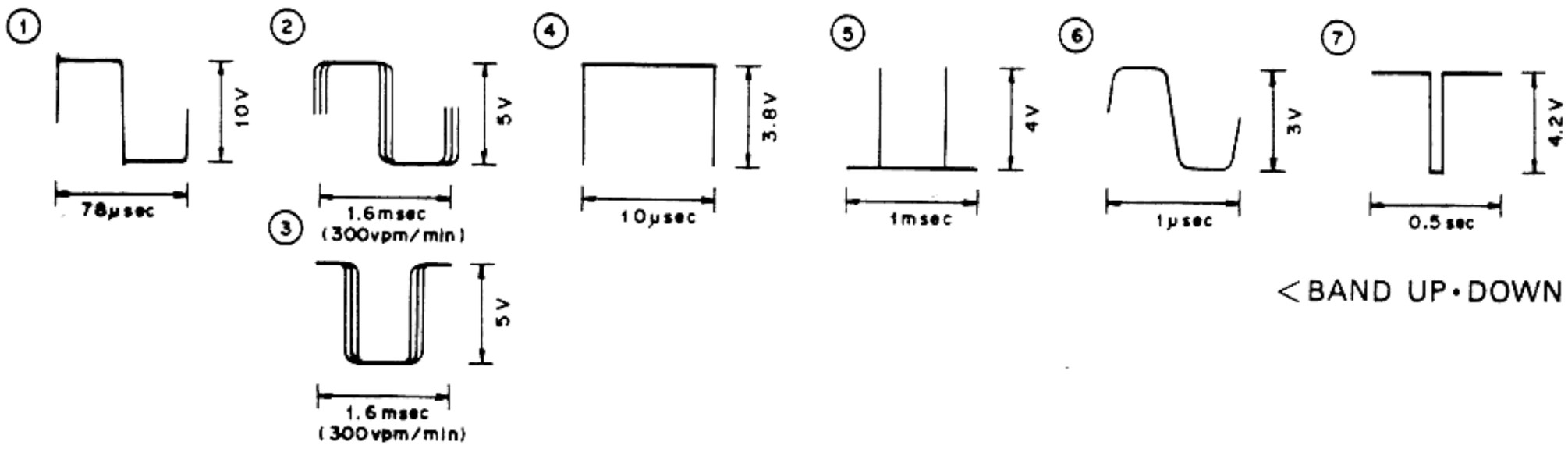

<V1, V3 PHASE DIFFERRENCE 90°>

<BAND UP•DOWN FUNCTION>

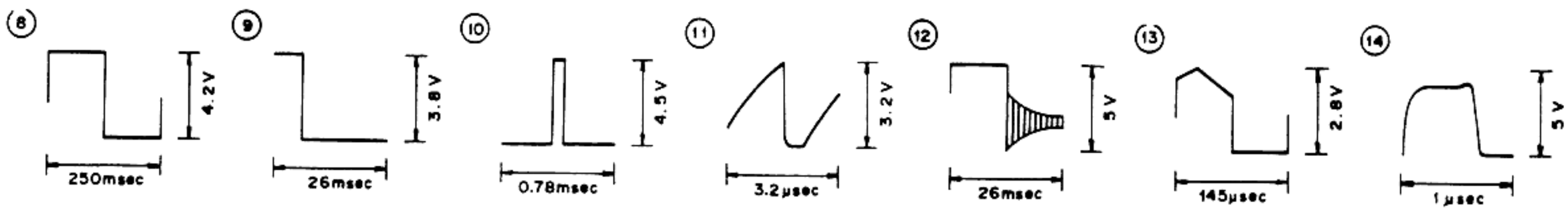

<SCAN FUNCTION> <BAND UP•DOWN FUNCTION>

<BAND UP•DOWN FUNCTION>

CIRCUIT DIAGRAM

Signal — Control — Common DC line

PLL ASS'Y, ENCODER ASS'Y, DIGITAL, DISPLAY and 6KEY SW Unit.

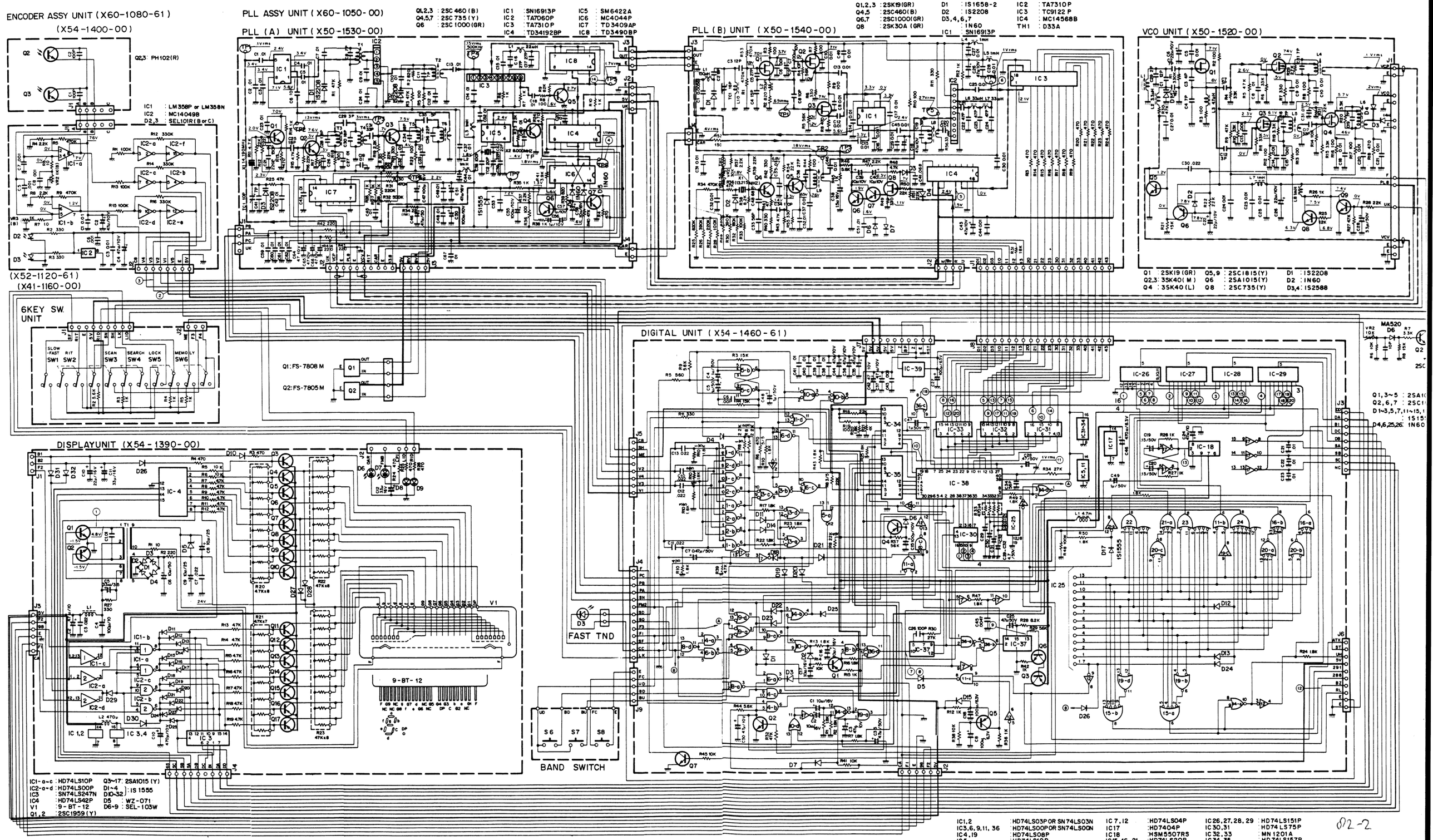

82-1

82-2

REFERENCE DATA(EXAMPLE)

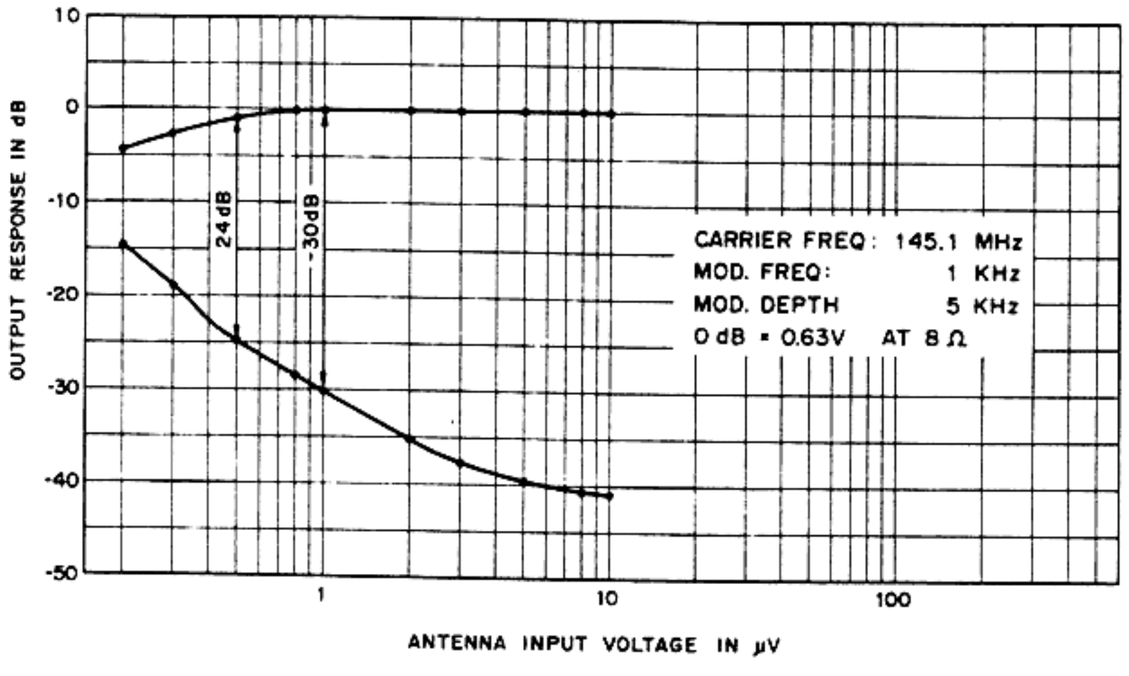

Signal to Noise Ratio and Output
VS Antenna Voltage (**144MHz**) (**FM**)

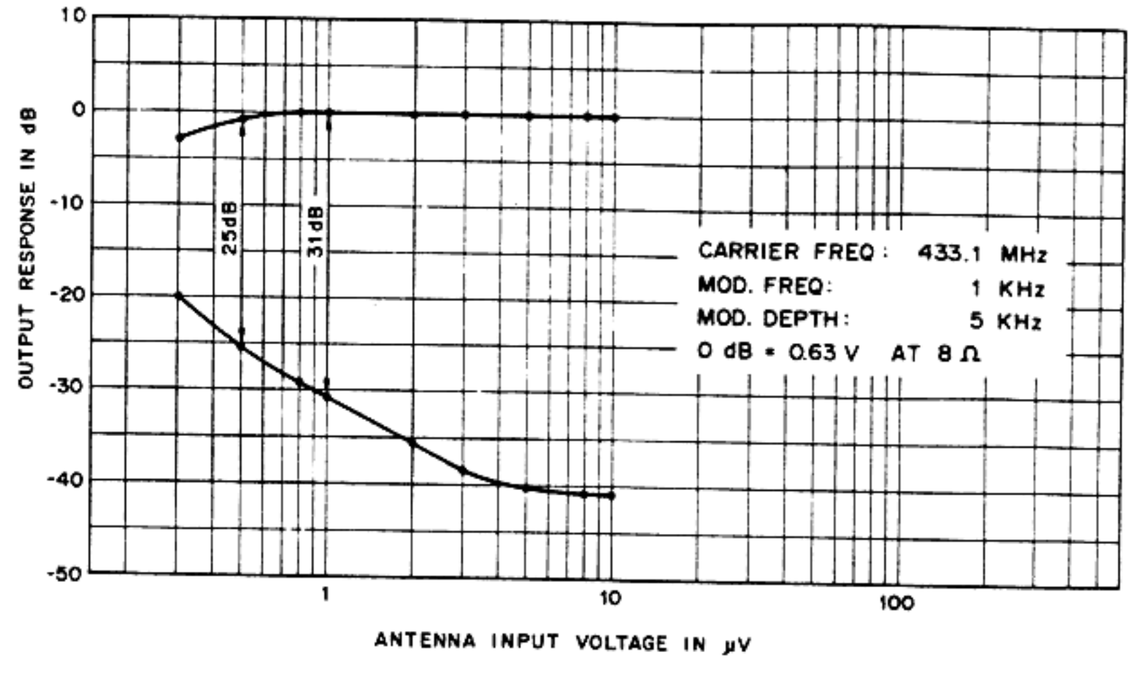

Signal to Noise Ratio and Output Level
VS Antenna Input Voltage (**430MHz**) (**FM**)

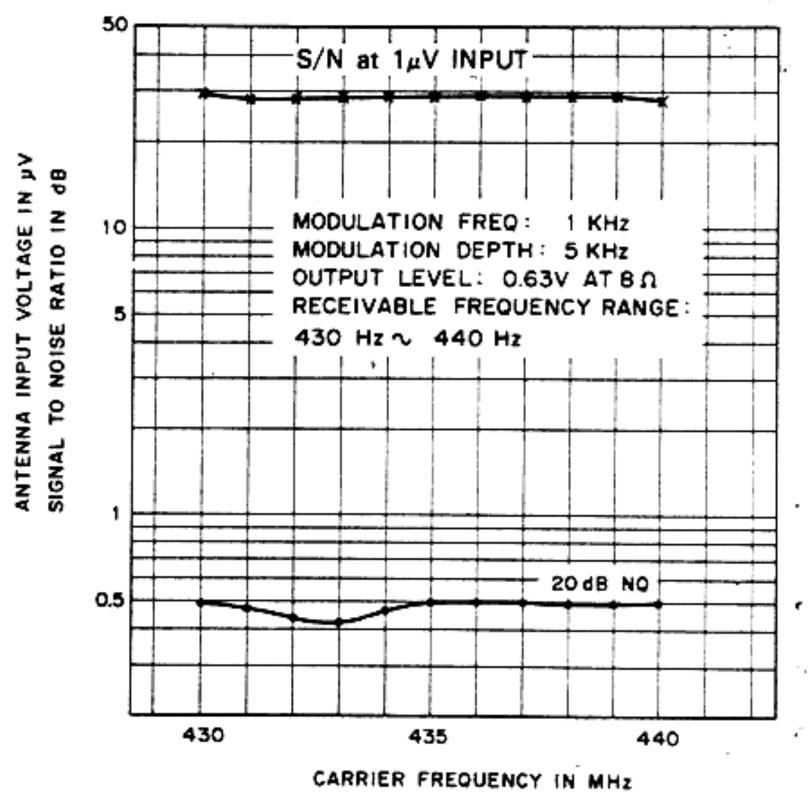

RX Sensitivity
(**20dB NQ**) (**430MHz**)

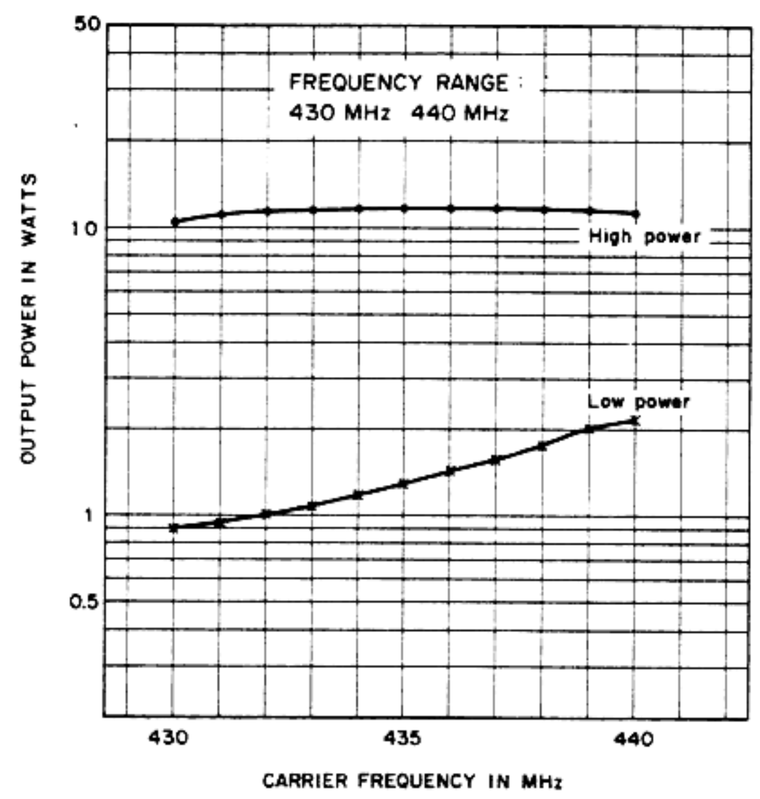

Example of Transmission Output
(**430MHz**)

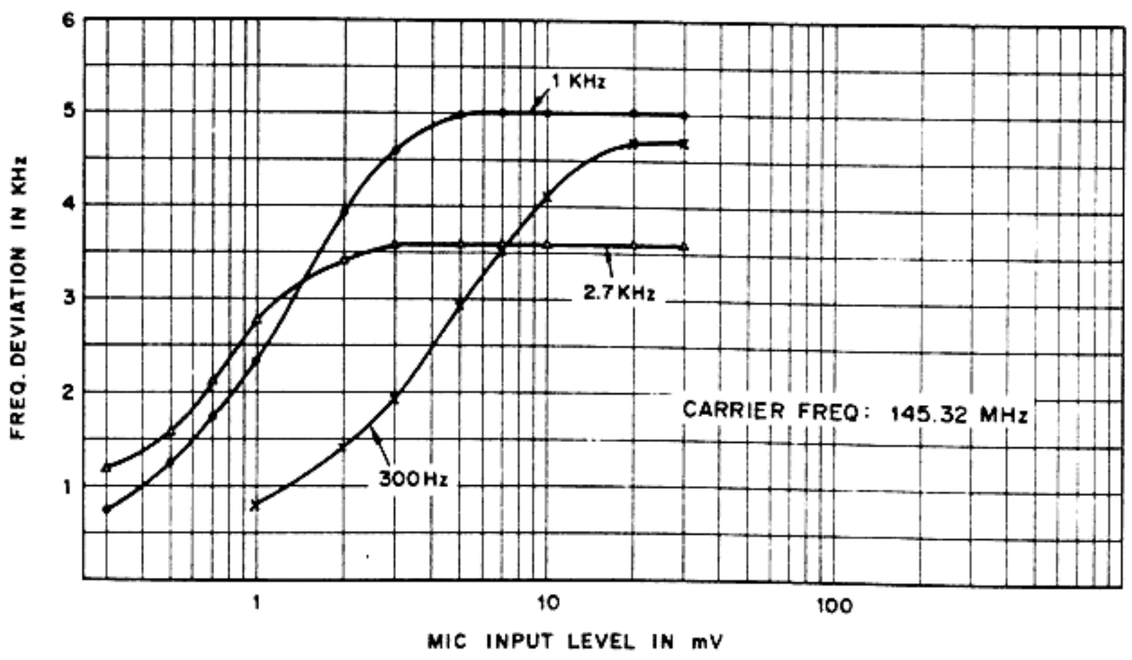

Deviation VS MIC input (**144MHz**)

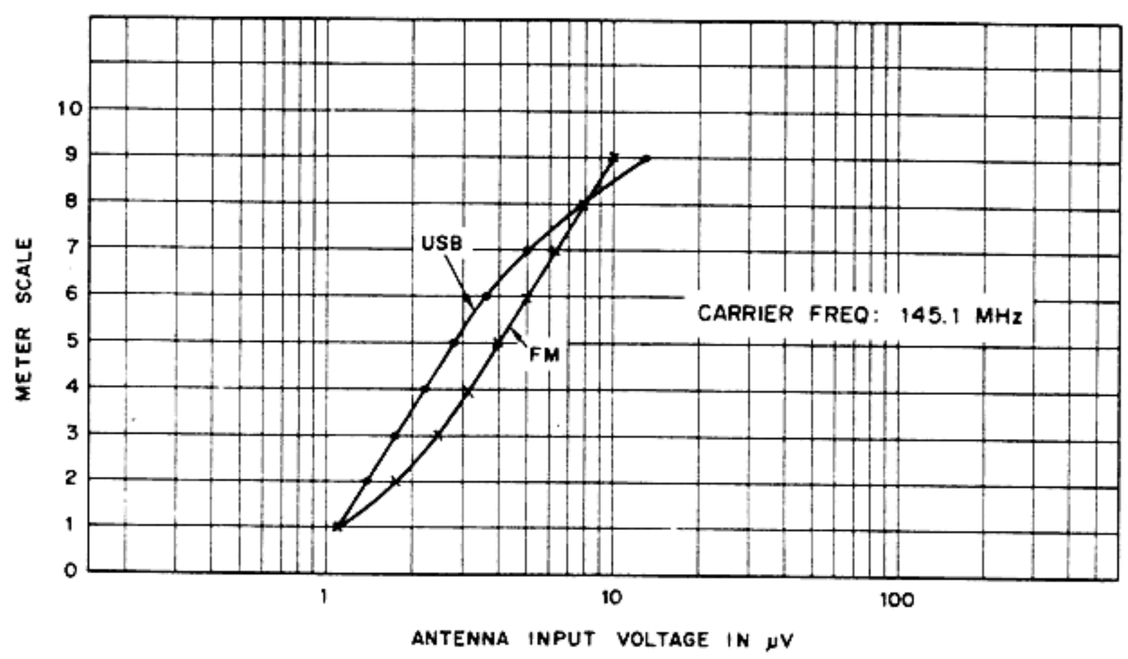

S meter sensitivity (**144MHz**)

SPECIFICATIONS

GENERAL

Frequency Range	144.0 ~ 146.0 MHz 430.0 ~ 440.0 MHz
Mode	SSB (USB, LSB), CW, FM
Voltage Requirements	220V AC, 50/60 Hz 12.0 ~ 16.0V DC (13.8V DC nominal)
Power Consumption	Receive (no signal): 45 watts (220V AC), 1.5A (13.8V DC) Transmit: 130 watts (220V AC), 6A (13.8V DC)
Semiconductor Complement	Transistors: 161 FETs: 31 ICs: 63 Diodes: 224
Dimensions	290 (W) × 124 (H) × 320 (D) mm (11"-7/16) × (4"-7/8) × (12"-5/8)
Weight	11 kg (24.2 lbs)

TRANSMITTER SECTION

RF Power Output	SSB, CW, FM: 10 watts FM (LOW): Approx. 1 watt
Modulation	SSB: Balanced modulation FM: Variable reactance frequency shift
Maximum frequency deviation (FM)	±5 kHz
Carrier Suppression	Better than 40 dB
Unwanted Sideband Suppression	Better than 40 dB
Suprious Radiation	Better than −60 dB
Microphone Impedance	500 ~ 600Ω
Antenna Impedance	50Ω
AF Response of Transmitter (SSB)	400 ~ 2600 Hz (−9 dB)
RPT Tone Frequency	1750 Hz

RECEIVER SECTION

Receiver Sensitivity	SSB, CW: 0.25 μV for 10 dB (S+N)/N FM: 1 μV for 30 dB (S+N)/N 0.4 μV for 20 dB
Intermediate Frequency	1st: 21.6 MHz 2nd: 8.83 MHz (144 MHz FM 455 kHz)
Image Rejection	1st IF: Better than 60 dB 2nd IF: Better than 50 dB
IF Rejection	Better than 70 dB
Squelch Sensitivity	0.25 μV
Audio Output	2.5 watts (with less than 10% distortion) into a 4 ohm load
Receiver Selectivity	SSB, CW: 2.4 kHz (−6 dB) 4.8 kHz (−60 dB) FM: 12 kHz (−6 dB) 24 kHz (−60 dB)
Frequency Stability	Within ±1 kHz during the first hour after 1 minute of warmup Within 150 Hz during any 30 minute period after warmup.

The above specifications are subject to change without notice for improvement.

A product of
TRIO-KENWOOD CORPORATION
6-17, 3-chome, Aobadai, Meguro-ku, Tokyo 153, Japan

TRIO-KENWOOD COMMUNICATIONS, INC.
1111, West Walnut Street, Compton, California, 90220, U.S.A.
TRIO-KENWOOD COMMUNICATIONS, GmbH
D-6374 Steinbach TS, Industriestrasse 8A, West Germany
TRIO-KENWOOD (AUSTRALIA) PTY. LTD.
30 Whiting Street, Artarmon, Sydney N.S.W. Australia 2064

© Printed in Japan B51-0894-00/400(G)

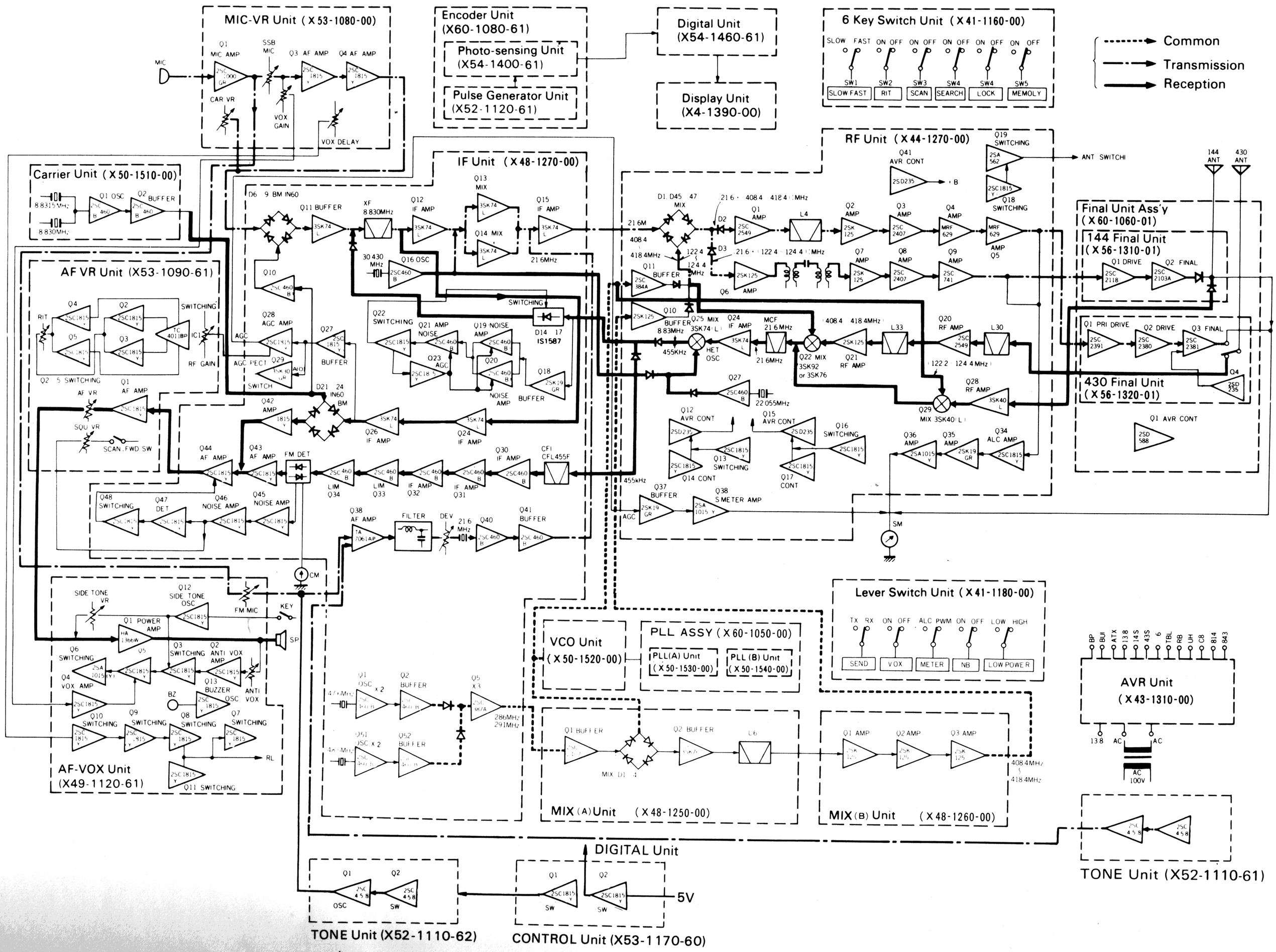
MIC-VR Unit (X53-1080-00)
Encoder Unit (X60-1080-61)
Photo-sensing Unit (X54-1400-61)
Pulse Generator Unit (X52-1120-61)
Digital Unit (X54-1460-61)
Display Unit (X4-1390-00)
6 Key Switch Unit (X41-1160-00)
Common
Transmission
Reception
Carrier Unit (X50-1510-00)
IF Unit (X48-1270-00)
RF Unit (X44-1270-00)
Final Unit Ass'y (X60-1060-01)
144 Final Unit (X56-1310-01)
430 Final Unit (X56-1320-01)
AF VR Unit (X53-1090-61)
AF-VOX Unit (X49-1120-61)
Lever Switch Unit (X41-1180-00)
VCO Unit (X50-1520-00)
PLL ASSY (X60-1050-00)
PLL(A) Unit (X50-1530-00)
PLL (B) Unit (X50-1540-00)
AVR Unit (X43-1310-00)
MIX (A) Unit (X48-1250-00)
MIX (B) Unit (X48-1260-00)
TONE Unit (X52-1110-61)
TONE Unit (X52-1110-62)
CONTROL Unit (X53-1170-60)
DIGITAL Unit
5V

SCHEMATIC DIAGRAM (IF Unit)

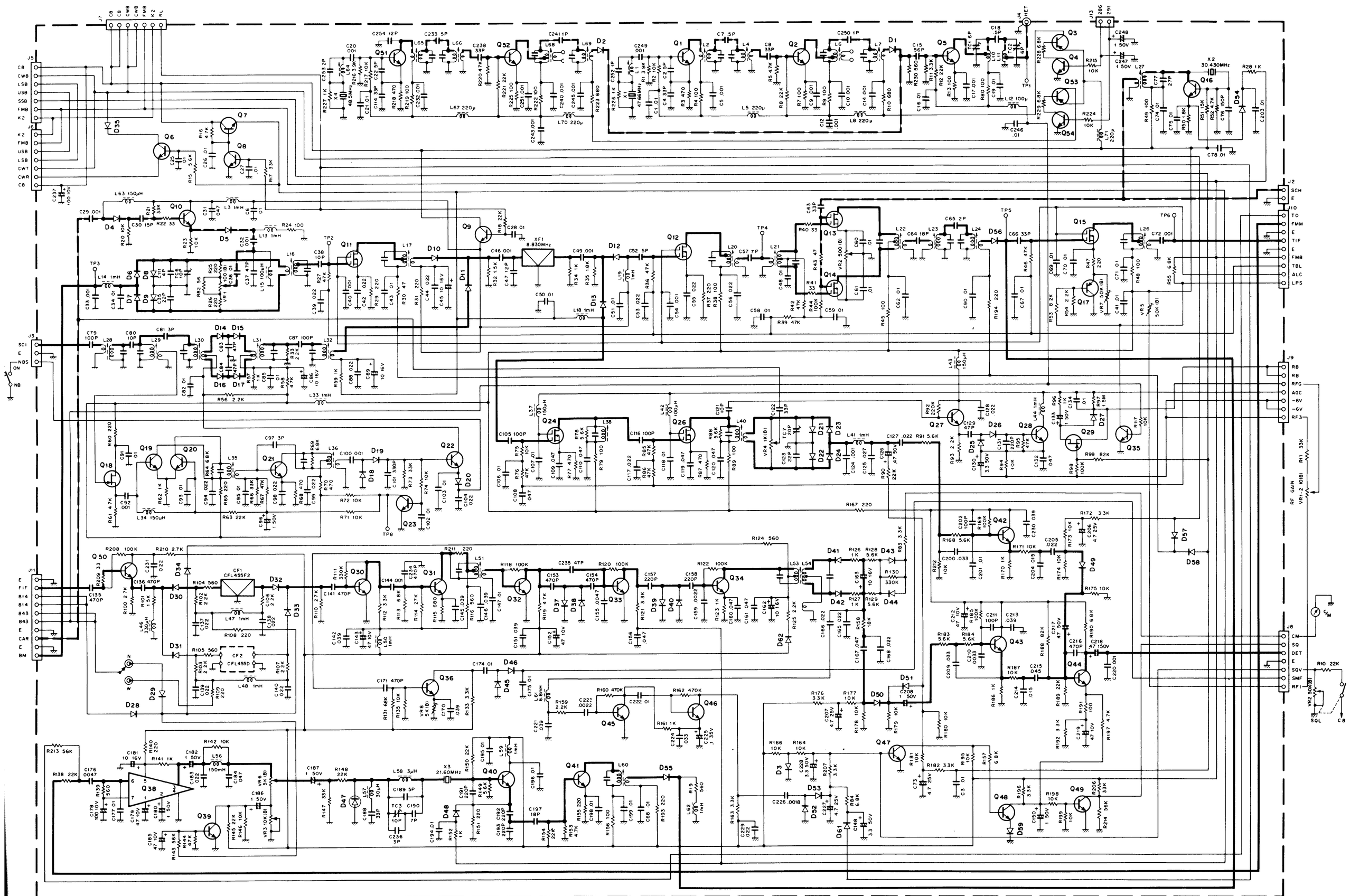

Q1,2,10,16,19~21,30~34, 40,41,50~52	: 2SC460(B)	Q11~15,24,26	: 3SK74 (L)	D1,2	: 1S2588
Q3,17,53	: 2SA1015(Y)	Q18	: 2SK19 (GR)	D3	: 1S1212
Q4,6~9,22,23,27,28, 35,39,42~49	: 2SC1815 (Y)	Q29	: 2SK30A(O)	D4,27~29,34,35, 37~40,48~51, 54~59,61,62	: 1S1555
Q5	: 2SC387A	Q36	: 2SC1345(E)		
		Q38	: TA7061AP		

D5,10~17,30~33	: 1S1587
D6~9,18,19,21~26, 41~46,52,53	: 1N60
D20	: MV-13
D47	: 1S2208

SCHEMATIC DIAGRAM (RF Unit)

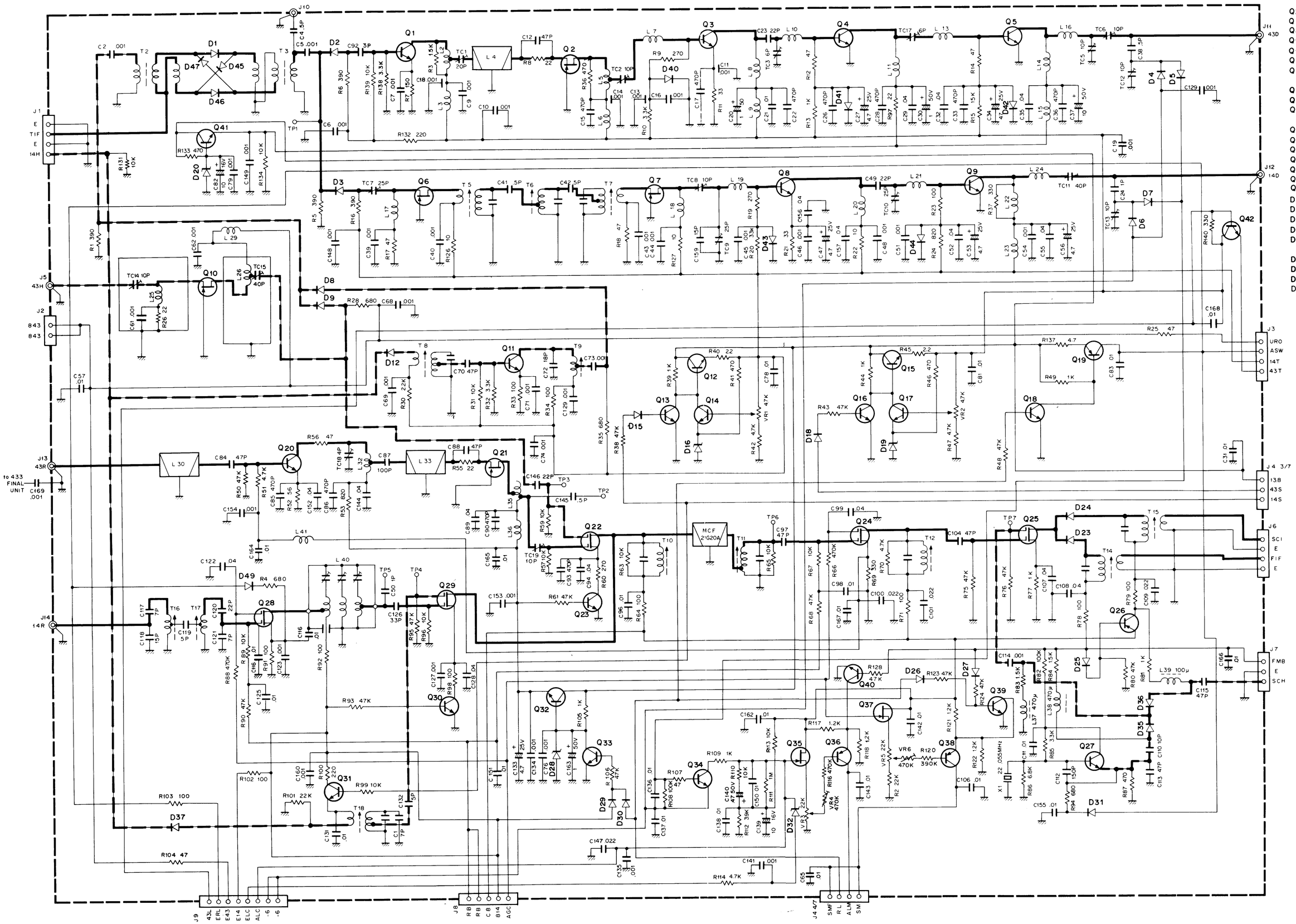

Q2,6,7,10,21	: 2SK125
Q3.8	: 2SC2407
Q4.5	: MRF629
Q9	: 2SC741
Q11	: 2SC387A
Q12.15.41	: 2SD235
Q13.14.16~18.23 30.31.33.34.39.40	: 2SC1815(Y)
Q19	: 2SA562(Y)
Q1,20	: 2SC2549
Q 22	: 3SK92 or 3SK76
Q 24.25	: 3SK74(L)
Q 26 . 36.38	: 2SA1015(Y)
Q 27	: 2SC460(B)
Q 28.29	: 3SK40(L)
Q 32	: 2SC735(Y)
Q 35.37	: 2SK19(GR)
Q 42	: 2SC496(Y)
D 1.45~47	: 1SS97
D 2.3.8.9	: 1S2588
D 4~7.25	: 1N60
D 12.23.24.35~37	: 1S1587
D15.18.26.27.29~31 41.42.44.49	: 1S1555
D16.19.32	: XZ060
D 20	: XZ132
D 28	: XZ117
D 40.43	: MU13

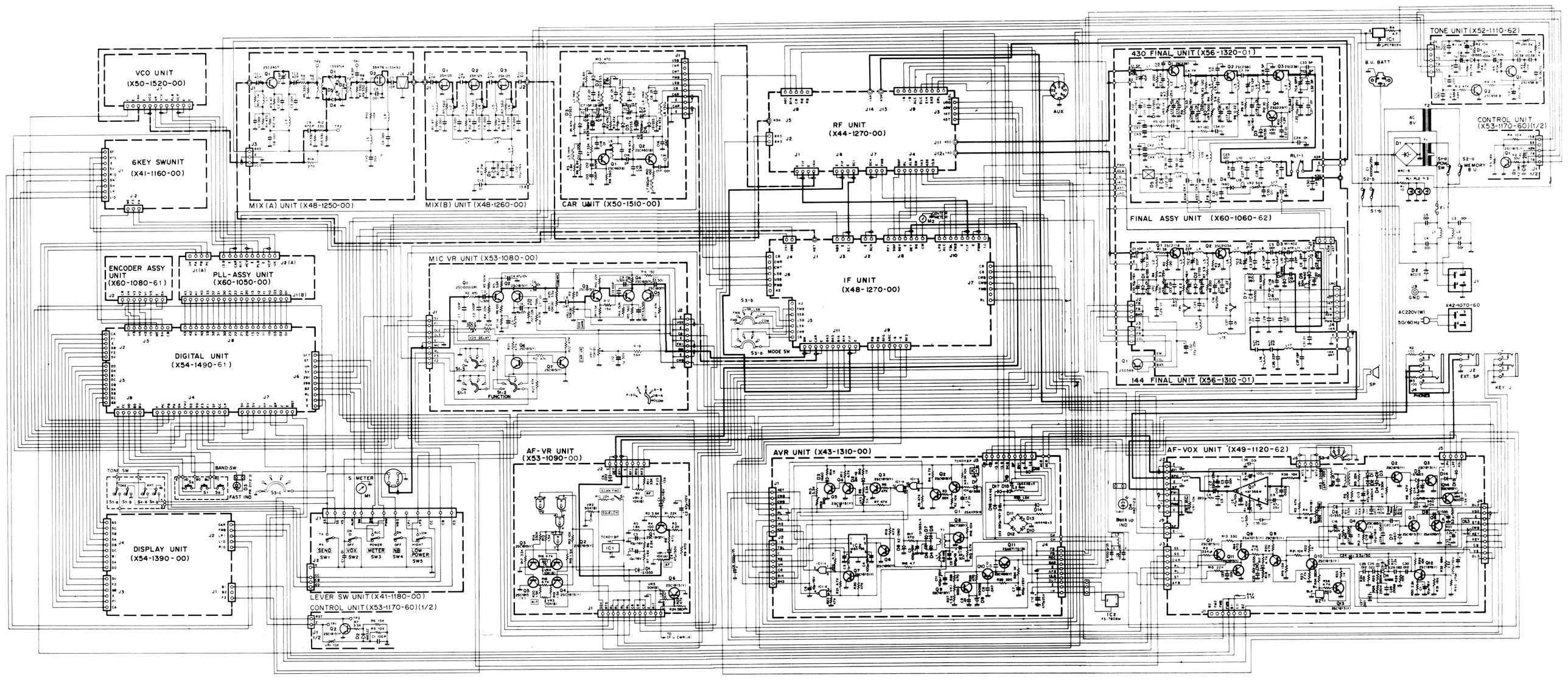
VCO UNIT (X50-1520-00)
6KEY SW UNIT (X41-1160-00)
MIX (A) UNIT (X48-1250-00)
MIX (B) UNIT (X48-1260-00)
CAR UNIT (X50-1510-00)
RF UNIT (X44-1270-00)
AUX
430 FINAL UNIT (X56-1320-01)
TONE UNIT (X52-1110-62)
B.U. BATT
CONTROL UNIT (X53-1170-60)(1/2)
FINAL ASSY UNIT (X60-1060-62)
144 FINAL UNIT (X56-1310-01)
ENCODER ASSY UNIT (X60-1080-61)
PLL-ASSY UNIT (X60-1050-00)
MIC VR UNIT (X53-1080-00)
IF UNIT (X48-1270-00)
DIGITAL UNIT (X54-1490-61)
AC220V(W)
50/60Hz
X42-1070-60
EXT. SP
KEY. J
PHONES
SP
AF-VR UNIT (X53-1090-00)
AVR UNIT (X43-1310-00)
AF-VOX UNIT (X49-1120-62)
TONE SW
BAND SW
FAST IND
S METER
DISPLAY UNIT (X54-1390-00)
LEVER SW UNIT (X41-1180-00)
CONTROL UNIT (X53-1170-60)(1/2)
Back up IND

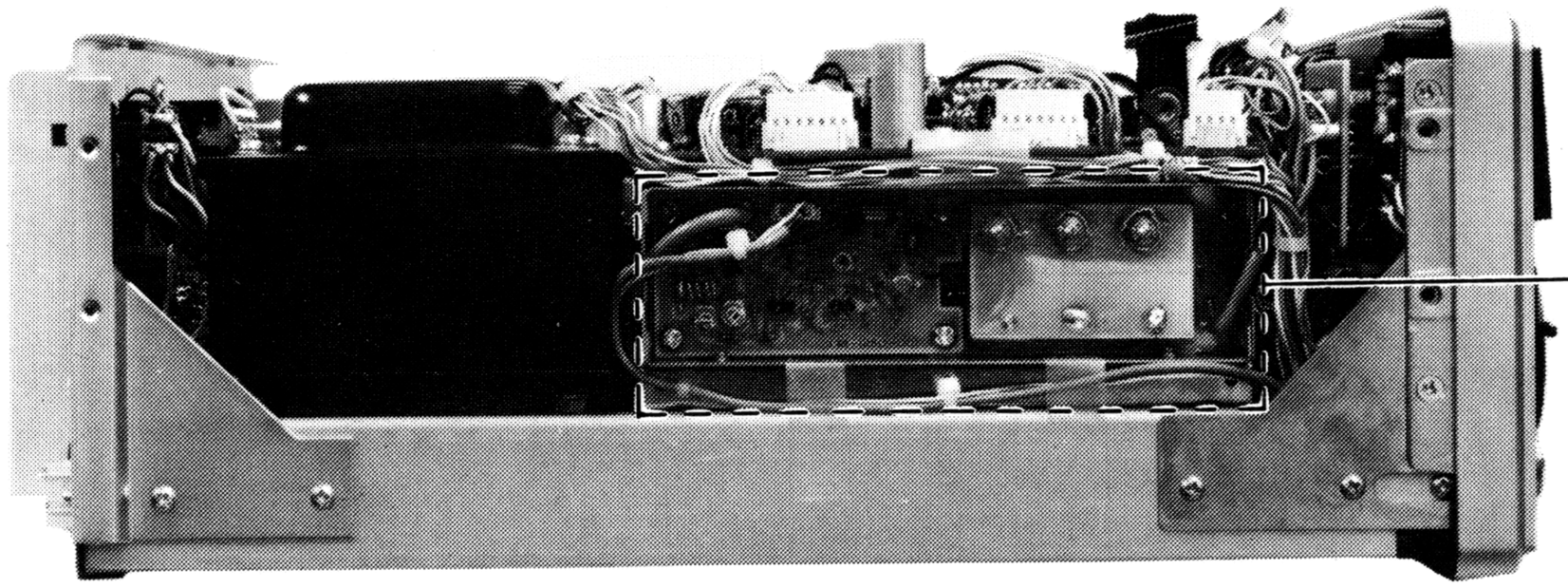
MIX (A) UNIT
(X48-1250-00)

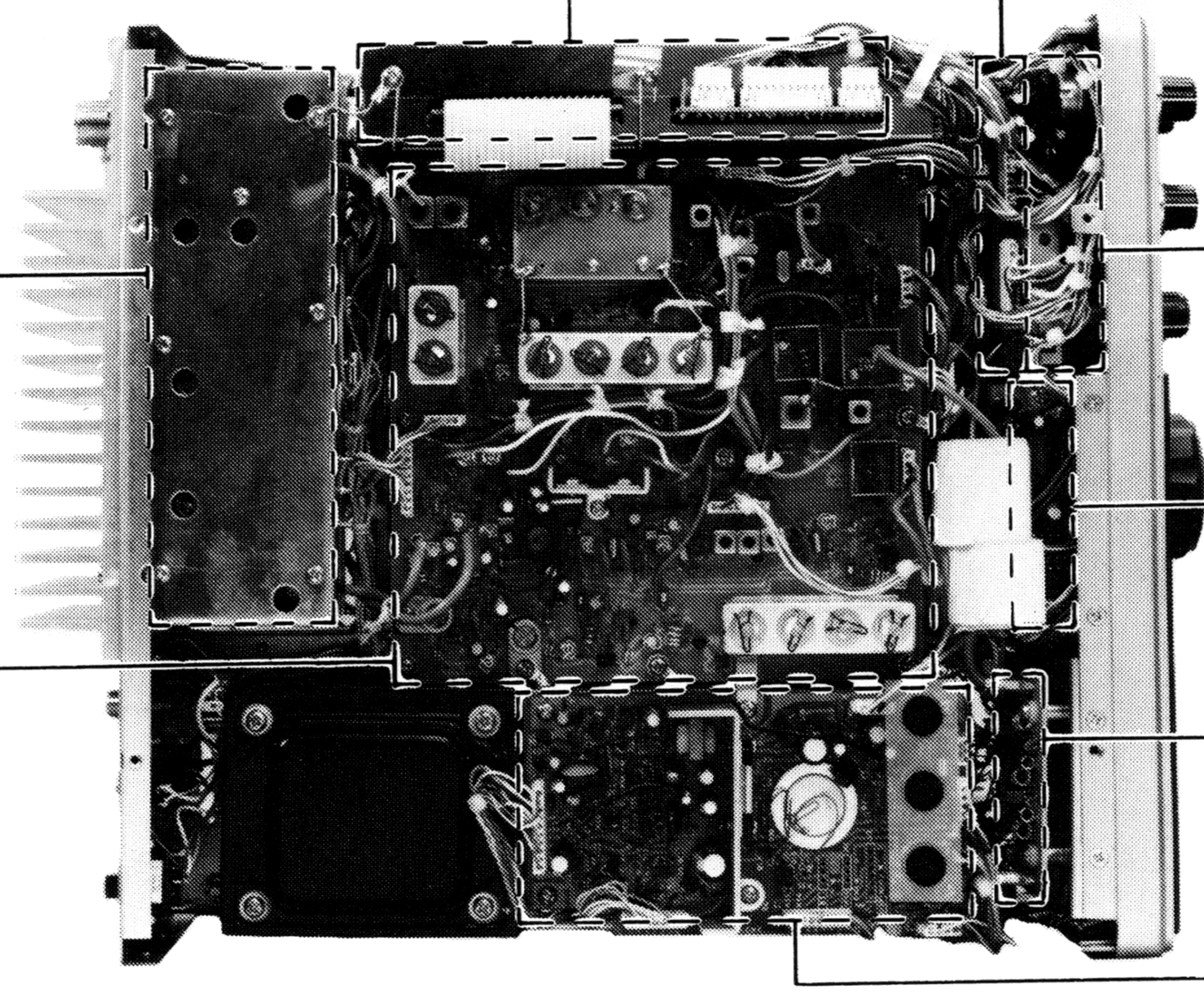
PLL Unit Ass'y
(X-60-1050-00)
AF VR Unit
(X53-1090-61)
430 Final Unit
(X56-1320-01)
MIC-VR Unit
(X53-1080-00)
Display Unit
(X54-1390-00)
RF Unit
(X44-1270-00)
(Lower side)
MIX (B) UNIT
(X48-1260-00)
Digital Unit
(X54-1490-61)
AF-VOX Unit
(X49-1120-61)

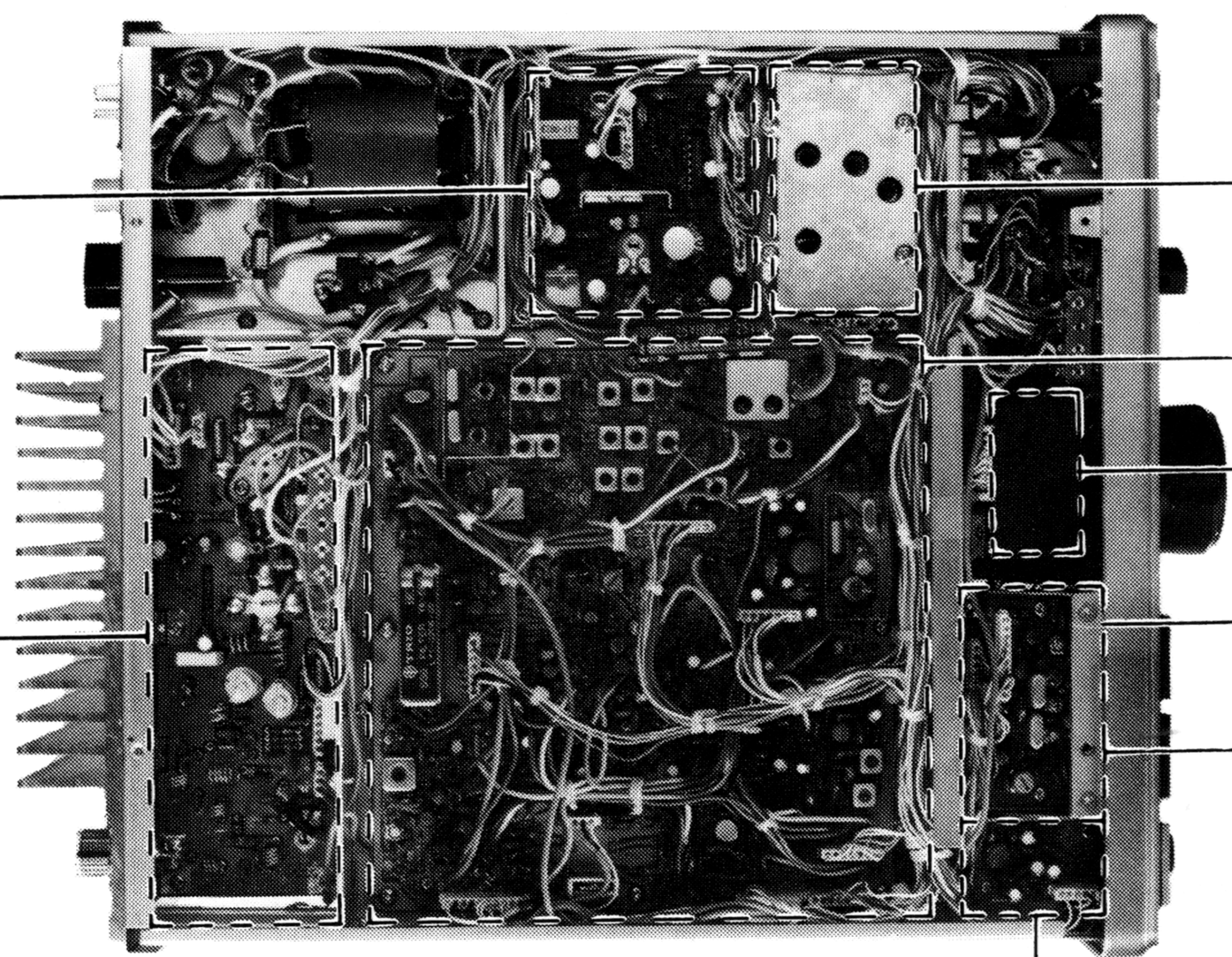
AVR Unit
(X43-1310-00)
VCO Unit
(X50-1520-00)
IF Unit
(X48-1270-00)
Encoder Unit
(X60-1080-61)
144 Final Unit
(X56-1310-01)
CAR Unit
(X50-1510-00)
6 Key Switch Unit
(X41-1160-00)
Tone Unit
(X52-1110-61)